Gear Catalog

Download the most up-to-date versions at www.rexnord.com

# Falk A-Plus Parallel & Right-Angle Shaft Drives

(Inch)

# FALK A+PLUS
## Site proven drives for the most demanding applications

Falk A+Plus parallel-shaft drives feature super-rugged designs to meet every operating challenge. And they're site-proven in the world's most demanding applications to take plenty of tough, on-the-job punishment.

Application-engineered to maximize strength and minimize wear, and to extend service life, these drives deliver steady, trouble-free operation, day-after-day. They're also specially designed and constructed to offer you maximum features and flexibility.

### A+Plus Smart Features

*FALK MAGNUM "NO-LEAK" SEALS* Falk's exclusive labyrinth-design, non-wearing Magnum seal keeps oil in and dirt out. A purgeable grease chamber with, in most cases a Viton contact seal, prevents the infiltration of dirt and grime. A unique drainback passage combines with a radial and axial bush seal to retain oil and eliminate leaks. Tandem lip type seals are used for high oil level requirements. Manufacturer's seal numbers are published for local sourcing.

*FALK SUPERIOR "HIGH STRENGTH" GEARING* – A+Plus gearing is engineered to exceed AGMA requirements. Coarse pitch helical gears (25° pressure angle) are protuberance hobbed, case carburized, and finish ground with lead and profile modifications that assure full contact under load. These modifications, when combined with housing bore accuracy and assembly quality, provide gear mesh performance that is equivalent to gearing with a quality 12 level. Spiral bevel gears are case carburized, shot peened and finish skived. A+Plus gears can take the shock, where others fail.

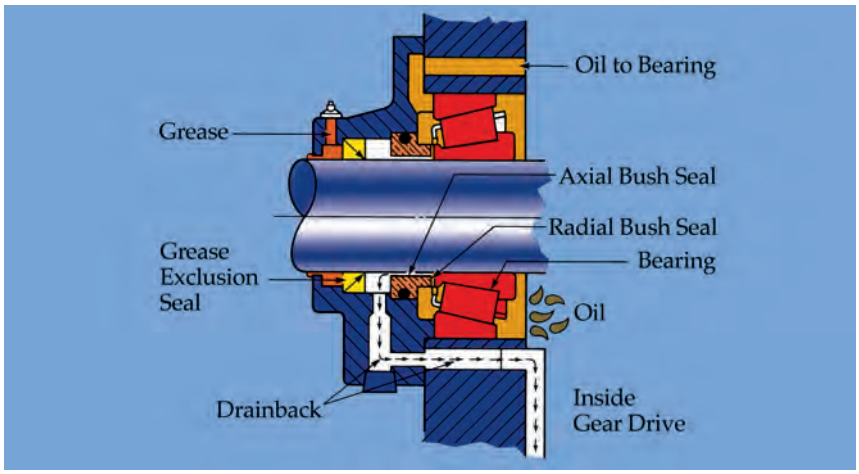


*A+PLUS "MESH ACCURATE" QUIET OPERATION* – A+Plus advanced dynamic design, superior manufacturing and assembly standards, andstringent quality controls develop "mesh-accurate" gearing that assures exceptionally smooth and quiet operation and extended service life.

*A+PLUS "TOUGH" STEEL HOUSINGS* A Falk exclusive. Rugged, all-welded steel housings simplify rebuild or bearing replacement. Extra strength and rigidity to maintain accurate gear alignments.

*REDUCED DOWN TIME* – At 200°F (93°C) Falk A+Plus Viton oil-seals have 18 times the operating life of conventional Nitrile seals.

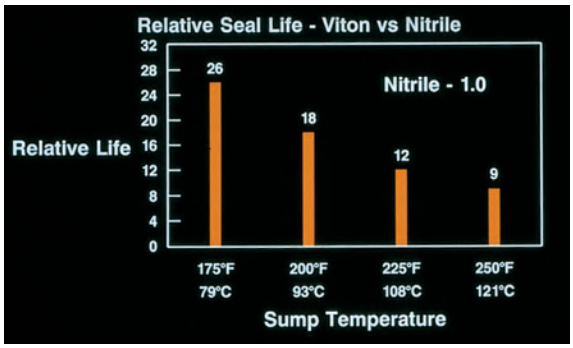


*LOWER COSTS* – A+Plus standard features significantly reduce long-term costs of maintenance and repair downtime.

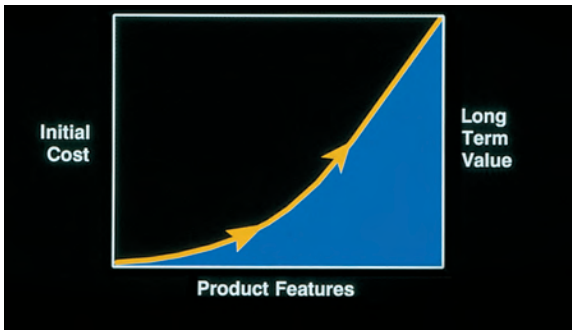

*PRODUCT FLEXIBILITY FOR THE JOB*

Falk A+Plus Gear Drives are used worldwide in a broad range of industries and applications. They are available in horizontal or vertical arrangements with solid or hollow low speed shaft for foot, flange, or shaft mounting.
We can meet requirements to 19,000 Hp/ 15000 kW and catalog torque ratings to 5,600,000 lb-in/ 630,000 Nm with speed ratios from 1.8:1 to 437.9:1.

*OTHER STANDARD FEATURES*

Positive Lubrication – Oil splash feed or pump lubrication to all rotating elements.

*SUPERIOR GEAR BOX EFFICIENCY*

Dynamic design plus manufacturing accuracy. Helical gearing offers up to 99% gear-mesh efficiencies.

*Longer-Life Bearings* – Sized for exceptional performance under worst load conditions. Readily available tapered or roller bearings. Published manufacturer numbers for local sourcing.

*High-Strength Shafts* – Accurate support. High stiffness and shock resistance.

*Convenient Inspection* – Removable covers or plugs permit inspection of rotating members.

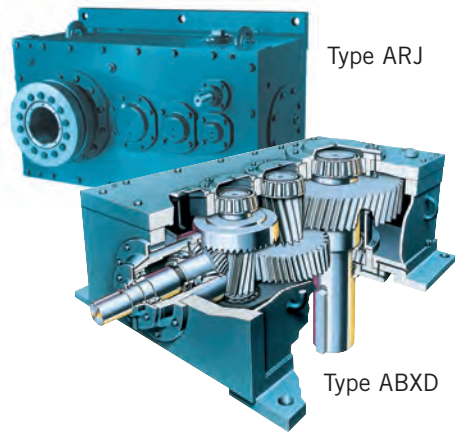


*Filtered Air Breathers* – No pressure buildup. No contaminants.

*UNIVERSAL HOUSING FEATURES*

*Mounting Flexibility* – Symmetrical tub/cover housing adapts to vertical or horizontal mounting; allows ready access to all rotating elements.

*Positive Lubrication for Vertical Mountings* – Motor-driven external pump with filter and flow switch provides constant oil flow.

*No-Leak Drywell* – Positive oil retention in vertical low speed shaft applications.

*Hollow Output* – Available for horizontal and vertical configurations.

*3-Year Heavy-Duty Warranty*
A+Plus is backed by the industry's first standard 3-year warranty, providing full "shaft-to-shaft" protection on all Falk components - including bearings and seals.

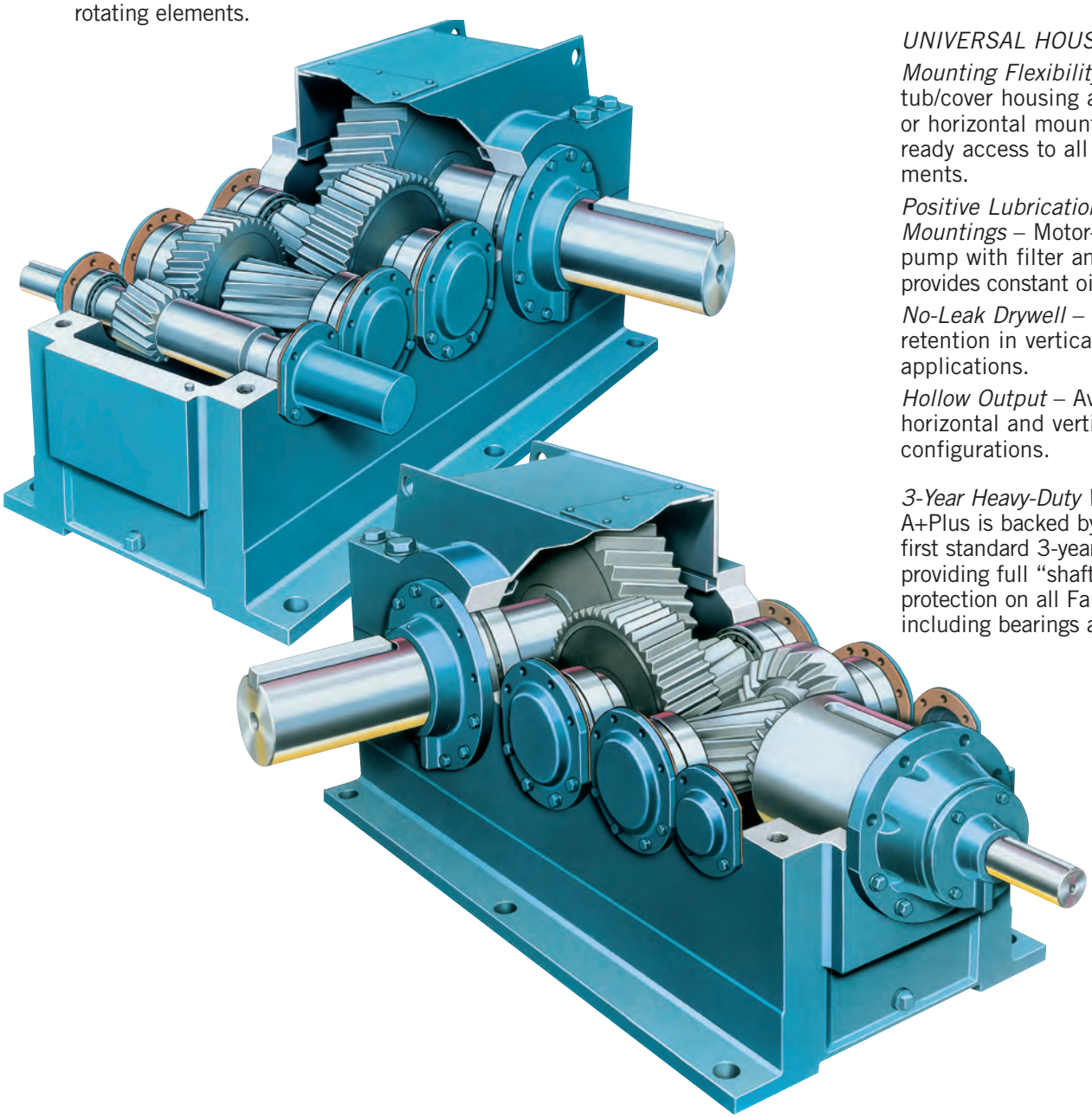

# A+Plus Heavy-Duty Drives – Selection Guide

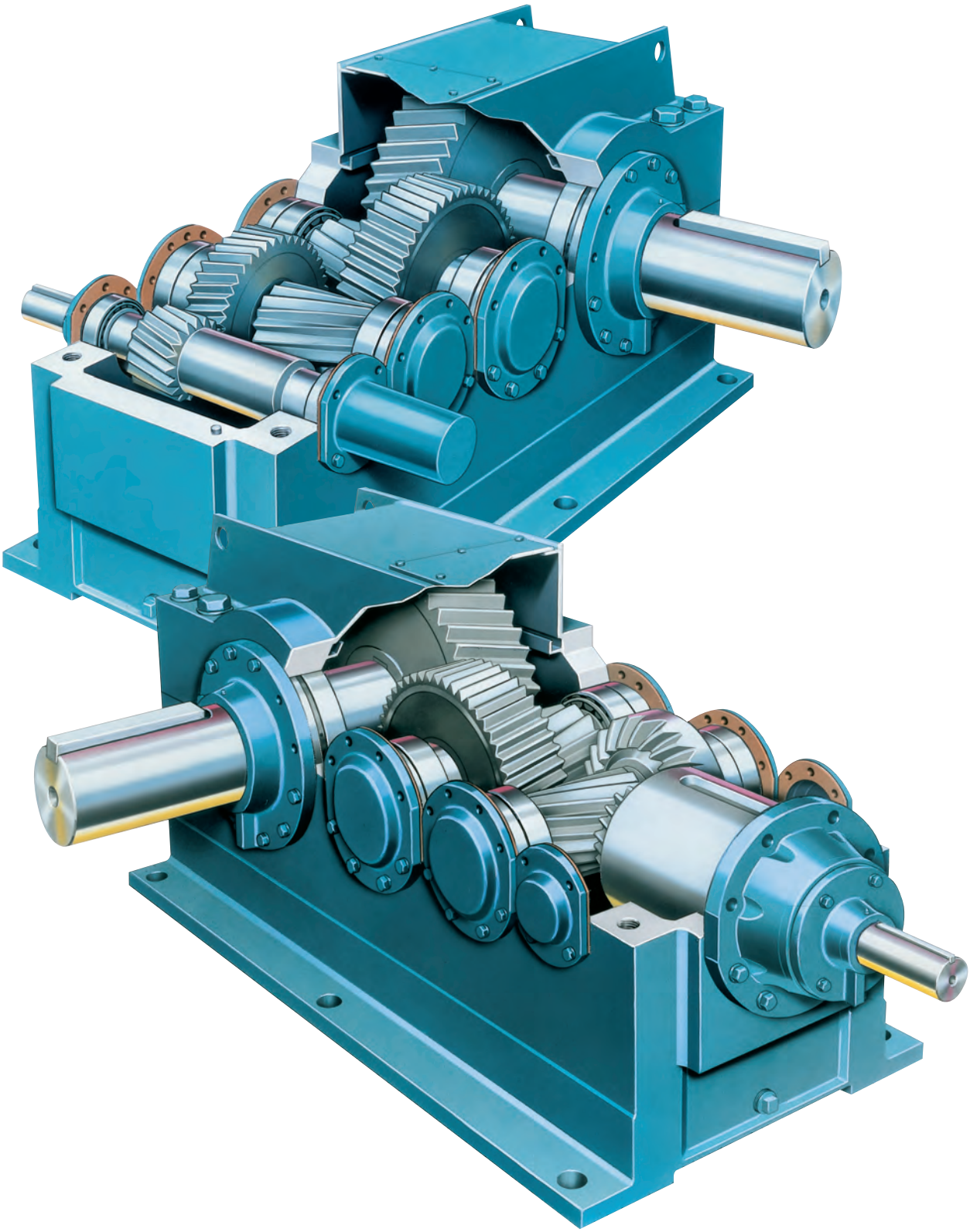

# Selection Guide 131-110, June 2009

## Table of Contents


Basic Information . . . . . 5
Conditions Affecting Selection . . . . . 6
Mechanical Service Factors . . . . . 7-8
How to Select . . . . . 9
Thermal Factors & Procedures . . . . . 10
Selection Examples . . . . . 11
Accessory & Option Information . . . . . 12-14
Nomenclature . . . . . 15
How to Order . . . . . 16
**Parallel Shaft Type A Drives**
Assemblies & Rotations . . . . . 17
Horsepower & Torque Ratings . . . . . 18-33
Basic Thermal Ratings . . . . . 34-39
Overhung Load Ratings & Thrust Capacity . . . . . 40-47
Exact Ratios . . . . . 48-49
Dimensions . . . . . 50-66
**Right Angle Shaft Type AB Drives**
Assemblies & Rotations . . . . . 65-67
Horsepower & Torque Ratings . . . . . 68-77
Basic Thermal Ratings . . . . . 78-80
Overhung Load Ratings & Thrust Capacity . . . . . 81-84
Exact Ratios . . . . . 85
Dimensions . . . . . 86-97
Availability & Compatibility of Accessories . . . . . 98-99
Accessories Dimensions . . . . . 100-112
Hollow Low Speed Shaft Dimensions . . . . . 113-114
MCF Couplings (Moment Connection) . . . . . 115-116
Conversion Factors . . . . . 117


THREE YEAR 3 THREE HEAVY DUTY WARRANTY

**Factory Warranty** We're so confident in the performance and reliability of our latest generation of Falk™ gear drives that we're backing this comprehensive offering with the best standard warranty in the business. Our full, 3-year Heavy-Duty Warranty provides "shaft-to-shaft" protection on all Falk™ components – *including bearings and seals*. It's an industry first... and one more powerful reason why Rexnord is your ultimate bottom-line drive and coupling value.★

★ Warranty extends for 3 years from date of shipment.

# Basic Information

## Safety Notes

**Falk™ Gear Drives** The Falk™ and Rexnord name on the gear drive is the purchaser's assurance that the drive was engineered, rated and manufactured to sound design practices.


Copyright 1998 , 2009, Rexnord Industries, LLC. All Rights Reserved. Litho in U.S.A. FALK in a trademark of Rexnord. A-PLUS, LIFELIGN, OMNIBOX, RAM, REXNORD, RENEW, STEELFLEX, and ULTRAMITE are registered trademarks. Magnum Seal is a trademark of Rexnord for its rotary shaft sealing system for enclosed gear drives. Viton is a registered trademark of the DuPont Co.
The contents of this selection guide are subject to change without notice or obligation. Information contained herein should be confirmed before placing orders.


The power supplied to the geared drive must be equal to or less than the power for which the drive was selected using the appropriate service factor for the application. The customer must assume the responsibility of isolating the geared drive from any vibratory or transient load induced by the driven equipment.

Install and operate Rexnord products in conformance with applicable local and national safety codes and per Rexnord installation manuals which are shipped with gear drives and are also available upon request. Suitable guards for rotating members may be purchased from Rexnord as optional accessories. Consult your local Rexnord district office for complete details.

**People Conveying Equipment** Selection of Rexnord gear drives for applications whose primary purpose is the transportation of people is not approved. This includes such applications as freight or passenger elevators, escalators, man lift platforms and ski tows and ski lifts.

If the primary purpose of the application is material conveyance and occasionally people are transported, the Rexnord warranty may remain in effect provided the design load conditions are not exceeded and certification to the appropriate safety codes and load conditions has been obtained by the system designer or end user from the appropriate enforcement authorities.

**Gear Drive Ratings** All gear drive ratings in this selection guide allow 100% overload for starting loads and momentary overloads for electric motor driven applications operating 10 hours per day under uniform conditions (unity Service Factor). For other conditions, compute an equivalent power by multiplying the actual power required for the application by the appropriate Service Factor.

**Power and Torque** Gear drive mechanical power and torque ratings are tabulated in the selection guide to permit selections for specific application requirements. When the required input speed falls between two tabulated input speeds of a drive with the same number of gear reductions, interpolate to determine drive rating.

**Thermal Ratings** must be considered when selecting a gear drive. Refer to Page 10 for more information.

**Stored and Inactive Drives** Each gear drive is spin-tested with a rust preventive oil that will protect parts against rust for a period of 4 months in an outdoor shelter or 12 months in a dry building after shipment from the Factory.

Periodically inspect stored or inactive drives and spray internal parts with rust inhibitor every six months or more often, if necessary. Drain oil before adding rust inhibitor. Indoor dry storage is recommended.

Drives ordered for extended storage can be treated at the Factory with a special preservative and sealed to rust-proof parts for periods longer than those cited above, if specified on the order.

Refer to appropriate service manual for extended storage of gear drives which have been in service.

**Drawing Symbols** The following symbols are used throughout the dimensioned drawings.

= OIL DIPSTICK
= BREATHER
= OIL FILL
= OIL DRAIN

A-PLUS®

# Conditions Affecting Selection

## Non–Standard Application Procedures

The following conditions may affect the gear drive selection procedure, drive size and auxiliary equipment being furnished.

**Excessive Overloads** The maximum momentary or starting load must not exceed 200% of rated load (100% overload). Rated load is defined as gear drive rating with a Service Factor of 1.0. If the maximum starting or momentary load exceeds the above conditions, compute a second equivalent horsepower by dividing the peak load by two. The gear drive selected must have capacity equal to, or in excess of, the larger equivalent horsepower.

**Reversing Service** Applications involving either more than 20 reversals per 10 hour period, or less than 20 reversals per 10 hour period with peak torques greater than 200% of normal load must be referred to the Factory.

**Brake Equipped Applications** When a gear drive is equipped with a "working" brake that is used to decelerate the motion of the system and the brake is located between the prime mover and the gear drive, select the drive based on the brake rating or the highest equivalent input power, whichever is greater. If the brake is used for holding only and is applied after the motion of the system has come to rest, the brake rating must be less than 200% of the catalog rating of the gear drive selected for the application. If the brake rating is greater than 200% of the gear drive catalog rating, refer the application to the Factory. Also refer to the Factory all applications in which the brake is located on the output shaft of the gear drive.

**Oversize Prime Movers** Published Service Factors do not cover applications that require oversize prime movers for high energy or peak loads. Refer such applications to the Factory for selection of suitable drives.

**Speed Variation or Multi-Speed Applications** — The gear drives offered in this selection guide (except Types AXV & ABX) are designed to operate with splash lubrication on any single speed application and any ratio shown in the selection guide unless otherwise noted. It is essential that all orders indicate the desired operating speed and ratio so that the proper internal oil distribution accessories can be supplied for the specific speed. Types AXV and ABX use a separate motor driven oil pump to provide lubrication.

These drives are assembled with a variety of standard internal lubrication components such as oil pans and oil troughs to ensure proper splash lubrication. In addition, different oil levels are necessary for various drive sizes, speeds and ratios. Consequently, to operate an existing drive at different speeds from those shown on the nameplate, full application and nameplate information must be referred to the Factory for review of the lubrication system.

All variable or multi-speed applications will be referred to the Engineering Department to specify lubrication components for adequate lubrication at the slowest speed, without excessive heating or churning at the highest speed. It is essential that all orders indicate minimum and maximum speeds, as well as the speed duration cycles. A separate motor-driven oil pump (at an extra charge) may be required.

When selecting gear drives for multi-speed or variable speed applications, determine the speed which develops the greatest torque and select the drive on this basis. If the speed is not listed in the selection table, use the next lower speed.

**Application Adjusted Thermal Rating, Page 10,** The Application Adjusted Thermal Ratings is the actual power rating without service factor that a gear drive will transmit continually for three hours or more without overheating. The Application Adjusted Thermal Rating considers the environmental factors of the application which will affect the ability of the drive to dissipate heat. These factors include ambient temperature, air velocity, altitude (thin air does not remove heat effectively), inlet water temperature and duty cycle (percentage of an hour that the drive operates). Factors for these conditions must be used to modify the Basic Thermal Rating when determining the Application Adjusted Thermal Rating.

Checking the thermal rating is extremely important. If a gear drive creates heat faster than it can be dissipated, severe damage may occur.

If the gear drive operates for 3 hours or more per day and the run time equals or exceeds the shutdown time, or if the continuous operating time exceeds 3 hours, selection must be made on the basis of adequate thermal rating using the Application Adjusted Thermal Rating. The duty cycle factor considers an increase in the Basic Thermal Rating for gear drives that operate less than 100% of any one hour time period. If a drive operates for more than three hours and operates continuously for any given hour of the day, then the duty cycle must be considered 100%.

**Effects of Solar Energy** If a drive operates in the sun at ambient temperatures over 100°F (38°C), then special measures must be taken to protect the drive from solar energy. This protection can consist of a canopy over the drive or reflective paint on the drive. If neither is possible, a heat exchanger or other cooling device may be required.

**Overhung Loads and Thrust Loads** The overhung load and thrust load ratings published in this selection guide are based on a service factor of unity and a combination of the most unfavorable conditions of rotation, speed, direction of applied load and drive loading. If the calculated load exceeds the published value, or if an overhung load and thrust load are applied simultaneously to a shaft, refer complete application details to Rexnord. For more information refer to tables and guidelines on Pages 40-47 and 81-84.

**Product Modifications** Rexnord can supply special product modifications to suit your application needs. Contact Rexnord for housing modifications, special ratios, special shafts, special mounting conditions, accessory modifications and other special application requirements.

**Seal Housing Grease** All drives (and backstops if required) will be shipped with NLGI #2 grease in the seal housing cavities. Where this grease could contaminate a product, such as in the food and drug industries, clearly indicate on your purchase order that "Gear drive seal housing cavities must not contain grease."

**Oil Pump Equipped Application** When a drive is equipped with an external motor driven oil pump, such as an AXV or ABX, and the ambient temperature falls below 50 °F (10°C), or the oil viscosity is in excess of 8000 SSU, an oil heater may be required to maintain a satisfactory flow rate at startup to prevent bearing failure. Refer to your local Rexnord district office.


© Rexnord Industries, LLC, 1998, 2009.

## Table 1 — Service factor conversions

| Table 2 or 3 3 to 10 Hour Service Factor | 3 to 10 Hours per Day | Over 10 Hours per Day | Intermittent–Up to 3 Hours per Day † | |
|---|---|---|---|---|
| | Multi-Cyl. Engine ‡ | Multi-Cyl. Engine ‡ | Motor | Multi-Cyl. Engine ‡ |
| **1.00** | 1.25 | 1.50 | 1.00 | 1.00 |
| **1.25** | 1.50 | 1.75 | 1.00 | 1.25 |
| **1.50** | 1.75 | 2.00 | 1.25 | 1.50 |
| **1.75** | 2.00 | 2.25 | 1.50 | 1.75 |
| **2.00** | 2.25 | 2.50 | 1.75 | 2.00 |

† For applications operating one half hour or less per day and applications driven by single cylinder engines, refer to Factory.

‡ These service factors are based on the assumption that the system is free from serious critical and torsional vibrations and that maximum momentary or starting loads do not exceed 200% of the normal load.

## Occasional and intermittent service or engine driven applications

For multi-cylinder engine driven applications and all applications operating intermittently up to 3 hours per day, refer to Table 2 or 3 for the Service Factor of the same application operating 3 to 10 hours per day. Next, in the first column of Table 1, find this same Service Factor in bold face type. Then, to the right, under the desired hours service and prime mover, locate the converted Service Factor.

For example, from Table 3, the Service Factor is 1.25 for a uniformly loaded belt conveyor. From Table 1, for the same application the following are the Service Factors for various conditions.

1. Engine driven 3 to 10 hours per day; use 1.50 Service Factor.

2. Engine driven up to 3 hours intermittently; use 1.25 Service Factor.

3. Motor driven up to 3 hours intermittently; use 1.00 Service Factor.

## Table 2 — Service factors listed by industry

for electric motor, steam turbine or hydraulic motor drives . . . recommendations are MINIMUM and normal conditions are assumed.

| Industry | Service 3 to 10 Hour | Service Over 10 Hour |
|---|---|---|
| **BOTTLING AND BREWING** | | |
| Bottling Machinery | 1.00 | 1.25 |
| Brew Kettles, Continuous Duty | 1.25 | 1.25 |
| Can Filling machines | 1.00 | 1.25 |
| Cookers—Continuous Duty | 1.25 | 1.25 |
| Mash Tubs—Continuous Duty | 1.25 | 1.25 |
| Scale Hoppers—Frequent Starts | 1.25 | 1.50 |
| **CLAY WORKING INDUSTRY** | | |
| Brick Press | 1.75 | 2.00 |
| Briquette Machines | 1.75 | 2.00 |
| Clay Working Machinery | 1.25 | 1.50 |
| Pug Mills | 1.25 | 1.50 |
| **DISTILLING** | See Brewing | |
| **DREDGES** | | |
| Cable Reels, Conveyors | 1.25 | 1.50 |
| Cutter Head, Jig Drives & Pumps | 2.00 | 2.00 |
| Maneuvering Winches | 1.75 | 2.00 |
| Screen Drives | 1.75 | 2.00 |
| Stackers, Utility Winches | 1.25 | 1.50 |
| **FOOD INDUSTRY** | | |
| Beet Slicers | 1.25 | 1.50 |
| Bottling, Can Filling Machine | 1.00 | 1.25 |
| Cereal Cookers | 1.00 | 1.25 |
| Dough Mixers, Meat Grinders | 1.25 | 1.50 |
| **LUMBER INDUSTRY** | | |
| Barkers—Spindle Feed | 1.25 | 1.50 |
| Barkers—Main Drive | 1.75 | 1.75 |
| Carriage Drive | Refer to Factory | |
| Conveyors | | |
| Burner | 1.25 | 1.50 |
| Main or Heavy Duty | 1.50 | 1.50 |
| Main Log | 1.75 | 2.00 |
| Re-Saw Merry-Go-Round | 1.25 | 1.50 |
| Slab | 1.75 | 2.00 |
| Transfer | 1.25 | 1.50 |
| Chains—Floor | 1.50 | 1.50 |
| Chains—Green | 1.50 | 1.75 |
| Cut-Off Saws—Chain & Drag | 1.50 | 1.75 |
| Debarking Drums | 1.75 | 2.00 |
| Feeds—Edger | 1.25 | 1.50 |
| Feeds—Gang | 1.75 | 1.75 |
| Feeds—Trimmer | 1.25 | 1.50 |
| Log Deck | 1.75 | 1.75 |
| Log Hauls—Incline, Well Type | 1.75 | 1.75 |
| Log Turning Devices | 1.75 | 1.75 |
| Planer Feed | 1.25 | 1.50 |
| Planer Tilting Hoists | 1.50 | 1.50 |
| Rolls—Live—Off Bearing—Roll Cases | 1.75 | 1.75 |
| Sorting Table, Tipple Hoist | 1.25 | 1.50 |
| Transfers—Chain & Craneway | 1.50 | 1.75 |
| Tray Drives | 1.25 | 1.50 |
| Veneer Lathe Drives | Refer to Factory | |
| **OIL INDUSTRY** | | |
| Chillers | 1.25 | 1.50 |
| Oil Well Pumping | Refer to Factory | |
| Paraffin Filter Press | 1.25 | 1.50 |
| Rotary Kilns | 1.25 | 1.50 |
| **PAPER MILLS ★** | | |
| Agitator (Mixer) | | 1.50 |
| Agitator for Pure Liquids | | 1.25 |
| Barking Drums, Barkers—Mech. | | 2.00 |
| Beater | | 1.50 |
| Breaker Stack | | 1.25 |
| ♦Calender | | 1.25 |
| Chipper | | 2.00 |
| Chip Feeder | | 1.50 |
| Coating Rolls | | 1.25 |
| Conveyors— | | |
| Chip, Bark, Chemical | | 1.25 |
| Log (incl. Slab) | | 2.00 |
| Couch Rolls | | 1.25 |
| Cutter | | 2.00 |
| Cylinder molds | | 1.25 |
| ♦Dryers — Paper Mach. & Conveyor Type | | 1.25 |
| Embosser | | 1.25 |
| Extruder | | 1.50 |
| Fourdrinier Rolls—Lumpbreaker, Wire Turning Dandy & Return Rolls | | 1.25 |
| Jordan | | 1.50 |
| Kiln Drive | | 1.50 |
| Mt. Hope & Paper Rolls | | 1.25 |
| Platter | | 1.50 |
| Presses (Felt & Suction) | | 1.25 |
| Pulper (Continuous) | | 2.00 |
| Repulper (Heavy Shock) | | 2.00 |
| Reel (Surface Type) | | 1.25 |
| Screens | | |
| Chip & Rotary | | 1.50 |
| Vibrating | | 2.00 |
| Size Press | | 1.25 |
| Super Calenders ● | | 1.25 |
| Thickener & Washer | | |
| AC Motor | | 1.50 |
| DC Motor | | 1.25 |
| Vacuum Pumps | | 1.50 |
| Wind & Unwind Stand | | 1.25 |
| Winders (Surface Type) | | 1.25 |
| ♦Yankee Dryers | | 1.25 |
| **PLASTIC INDUSTRY** | | |
| Batch Drop Mill, 2 smooth rolls | 1.25 | 1.25 |
| Calenders | 1.50 | 1.50 |
| Compounding Mills | 1.25 | 1.25 |
| Continuous Feed, Holding & Blend Mill | 1.25 | 1.25 |
| Extruders | 1.50 | 1.50 |
| Variable Speed Drive | 1.50 | 1.50 |
| Fixed Speed Drive | 1.75 | 1.75 |
| Intensive Internal Mixers | | |
| Batch Mixers | 1.75 | 1.75 |
| Continuous Mixers | 1.50 | 1.50 |
| **RUBBER INDUSTRY** | | |
| Batch Drop Mill, 2 smooth rolls | 1.50 | 1.50 |
| Calenders | 1.50 | 1.50 |
| Cracker, 2 corrugated rolls | 2.00 | 2.00 |
| Cracker Warmer—2 roll, 1 corrugated roll | 1.75 | 1.75 |
| Extruders | | |
| Continuous Screw Operation | 1.75 | 1.75 |
| Intermittent Screw Operation | 1.75 | 1.75 |
| Holding, Feed & Blend Mill—2 Roll | 1.25 | 1.25 |
| Intensive Internal Mixers | | |
| Batch Mixers | 1.75 | 1.75 |
| Continuous Mixers | 1.50 | 1.50 |
| Mixing Mill—2 smooth rolls (if corrugated rolls are used, use Cracker Warmer service factors) | 1.50 | 1.50 |
| Refiner—2 roll | 1.50 | 1.50 |
| **SEWAGE DISPOSAL** | | |
| Bar Screens | 1.25 | 1.25 |
| Chemical Feeders | 1.25 | 1.25 |
| Collectors | 1.25 | 1.25 |
| Dewatering Screens | 1.50 | 1.50 |
| Scum Breakers | 1.50 | 1.50 |
| Slow or Rapid Mixers | 1.50 | 1.50 |
| Thickeners | 1.50 | 1.50 |
| Vacuum Filters | 1.50 | 1.50 |
| **SUGAR INDUSTRY** | | |
| Cane Knives, Crushers | | 1.75 |
| Mills (low speed end) | | 1.75 |
| **TEXTILE INDUSTRY** | | |
| Batchers, Calenders | 1.25 | 1.50 |
| Card Machines | 1.25 | 1.50 |
| Dry Cans, Dryers | 1.25 | 1.50 |
| Dyeing Machinery | 1.25 | 1.50 |
| Knitting Machinery | Refer to Factory | |
| Looms, Mangles, Nappers, Pads | 1.25 | 1.50 |
| Range Drives | Refer to Factory | |
| Slashers, Soapers, Spinners, Tenter Frames, Washers, Winders | 1.25 | 1.50 |
| **WINDLASS** | Refer to Factory | |

★ Service Factors for paper mill applications are applied to the nameplate rating of the electric drive motor at the motor rated base speed and are consistent with those shown in TAPPI standards.

♦ Anti-friction bearings only.

● A service factor of 1.00 may be applied at base speed of a super calender operating over a speed range of part constant power and part constant torque where the constant power speed range is greater than 1.5 to 1. A service factor of 1.25 is applicable to super calenders operating at constant torque over the entire speed range or where the constant power speed range is less than 1.5 to 1.

© Rexnord Industries,LLC, 1998, 2009.

## Table 3 Service factors listed by application

for electric motor, steam turbine or hydraulic motor drives . . . recommendations are MINIMUM and normal conditions are assumed

| Application | Service 3 to 10 Hour | Service Over 10 Hour |
|---|---|---|
| **AGITATORS** | | |
| Pure Liquids | 1.00 | 1.25 |
| Liquids & Solids | 1.25 | 1.50 |
| Liquids-Variable Density | 1.25 | 1.50 |
| **APRON CONVEYORS** | | |
| Uniformly Loaded or Fed | 1.25 | 1.50 |
| Heavy Duty | 1.25 | 1.50 |
| **APRON FEEDERS** | 1.25 | 1.50 |
| **ASSEMBLY CONVEYORS** | | |
| Uniformly Loaded or Fed | 1.25 | 1.25 |
| Heavy Duty | 1.25 | 1.50 |
| **BALL MILLS** | See Mills, Rotary | |
| **BARGE HAUL PULLERS** | 1.75 | 2.00 |
| **BARKING** | | |
| Drums (Coupling Connected) | | 2.00 |
| Mechanical | | 2.00 |
| **BAR SCREENS (Sewage)** | 1.25 | 1.25 |
| **BATCHERS (Textile)** | 1.25 | 1.50 |
| **BELT CONVEYORS** | | |
| Uniformly Loaded or Fed | 1.25 | 1.25 |
| Heavy Duty | 1.25 | 1.50 |
| **BELT FEEDERS** | 1.25 | 1.50 |
| **BENDING ROLLS (Machine)** | 1.25 | 1.50 |
| **BLOWERS** | | |
| Centrifugal | 1.25 | 1.25 |
| Lobe | 1.25 | 1.50 |
| Vane | 1.25 | 1.50 |
| **BOTTLING MACHINERY** | 1.00 | 1.25 |
| **BREWING** | See Table 2 | |
| **BRICK PRESS (Clay Working)** | 1.75 | 2.00 |
| **BRIQUETTE MACHINES (Clay Working)** | 1.75 | 2.00 |
| **BUCKET** | | |
| Conveyors Uniform | 1.25 | 1.50 |
| Conveyors Heavy Duty | 1.25 | 1.50 |
| Elevators Continuous | 1.25 | 1.50 |
| Elevators Uniform | 1.25 | 1.50 |
| Elevators Heavy Duty | 1.25 | 1.50 |
| **CALENDERS** | | |
| Rubber and Plastic | See Table 2 | |
| Textile | 1.25 | 1.50 |
| **CANE KNIVES** | | 1.75 |
| **CAN FILLING MACHINES** | 1.00 | 1.25 |
| **CARD MACHINES (Textile)** | 1.25 | 1.50 |
| **CAR DUMPERS** | 1.75 | 2.00 |
| **CAR PULLERS** | 1.25 | 1.50 |
| **CEMENT KILNS** | See Mills, Rotary | |
| **CENTRIFUGAL** | | |
| Blowers, Compressors, Discharge Elevators, Fans or Pumps | 1.25 | 1.25 |
| **CHAIN CONVEYORS** | | |
| Uniformly Loaded or Fed | 1.25 | 1.25 |
| Heavy Duty | 1.25 | 1.50 |
| **CHEMICAL FEEDERS (Sewage)** | 1.25 | 1.25 |
| **CLARIFIERS** | 1.00 | 1.25 |
| **CLASSIFIERS** | 1.25 | 1.50 |
| **CLAY WORKING** | See Table 2 | |
| **COLLECTORS (Sewage)** | 1.25 | 1.25 |
| **COMPRESSORS** | | |
| Centrifugal | 1.25 | 1.25 |
| Lobe | 1.25 | 1.50 |
| Reciprocating | | |
| Multi-Cylinder | 1.50 | 1.75 |
| Single-Cylinder | 1.75 | 2.00 |
| **CONCRETE MIXERS** | | |
| Continuous | 1.25 | 1.50 |
| Intermittent | 1.25 | 1.50 |

| Application | Service 3 to 10 Hour | Service Over 10 Hour |
|---|---|---|
| ▲**CONVEYORS—Uniformly loaded or Fed:** | | |
| Apron or Bucket | 1.25 | 1.50 |
| Assembly, Belt, Chain, Flight, Oven, Screw | 1.25 | 1.25 |
| ▲**CONVEYORS—Heavy Duty, Not Uniformly Fed** | | |
| Apron, Assembly, Belt, Bucket, Chain, Flight, Oven, Screw | 1.25 | 1.50 |
| **CONVEYORS—Severe Duty** | | |
| Live Roll | Refer to Factory | |
| Reciprocating Shaker | 1.75 | 2.00 |
| **COOKERS (Brewing & Distilling), (food)** | 1.25 | 1.25 |
| **COOLING TOWER FANS** | Refer to Factory | |
| ▲**CRANES** | | |
| Dry Dock Cranes, Main Hoist, Bridge and Trolley Travel | Refer to Factory | |
| **CRUSHERS** | | |
| Ore or Stone | 1.75 | 2.00 |
| Sugar | | 1.75 |
| **DEWATERING SCREENS (Sewage)** | 1.50 | 1.50 |
| **DISC FEEDERS** | 1.00 | 1.25 |
| **DISTILLING** | See Table 2 | |
| **DOUBLE ACTING PUMPS** | | |
| 2 or more Cylinders | 1.25 | 1.50 |
| Single Cylinder | Refer to Factory | |
| **DOUGH MIXER (Food)** | 1.25 | 1.50 |
| **DRAW BENCH (Metal Mills)** | | |
| Carriage & Main Drive | 1.25 | 1.50 |
| **DREDGES** | See Table 2 | |
| **DRY DOCK CRANES** | Refer to Factory | |
| **DRYERS & COOLERS (Mills, Rotary)** | | 1.50 |
| **DYEING MACHINERY (Textile)** | 1.25 | 1.50 |
| **ELEVATORS** | | |
| Bucket-Uniform Lood | 1.25 | 1.50 |
| Bucket-Heavy Duty | 1.25 | 1.50 |
| Bucket-Continuous | 1.25 | 1.50 |
| Centrifugal Discharge | 1.25 | 1.25 |
| ▲Escalators | **Not Approved** | |
| ▲Freight | **Not Approved** | |
| Gravity Discharge | 1.00 | 1.25 |
| ▲Man Lifts, Passenger | **Not Approved** | |
| **EXTRUDERS (Plastic & Rubber)** | See Table 2 | |
| **FANS** | | |
| Centrifugal | 1.25 | 1.25 |
| Cooling Towers | Refer to Factory | |
| Forced Draft | | 1.25 |
| Induced Draft | 1.50 | 1.50 |
| Large (Mine, etc.) | 1.50 | 1.50 |
| Large Industrial | 1.50 | 1.50 |
| Light (Small Diameter) | 1.00 | 1.25 |
| **FEEDERS** | | |
| Apron, Belt | 1.25 | 1.50 |
| Disc | 1.00 | 1.25 |
| Reciprocating | 1.75 | 2.00 |
| Screw | 1.25 | 1.50 |
| **FLIGHT CONVEYORS** | | |
| Uniform | 1.25 | 1.25 |
| Heavy | 1.25 | 1.50 |
| **FOOD INDUSTRY** | See Table 2 | |
| **GENERATORS (Not Welding)** | 1.00 | 1.25 |
| **GRAVITY DISCHARGE ELEVATORS** | 1.00 | 1.25 |
| **HAMMER MILLS** | 1.75 | 2.00 |
| ▲**HOISTS** | | |
| Heavy Duty | 1.75 | 2.00 |
| Medium Duty | 1.25 | 1.50 |
| Skip Hoist | 1.25 | 1.50 |

| Application | Service 3 to 10 Hour | Service Over 10 Hour |
|---|---|---|
| **INDUCED DRAFT FANS** | 1.50 | 1.50 |
| **KILNS** | See Mills, Rotary | |
| **LAUNDRY WASHERS** | 1.50 | 2.00 |
| **LAUNDRY TUMBLERS** | 1.25 | 1.50 |
| **LINE SHAFTS** | | |
| Driving Processing Equipment | 1.25 | 1.50 |
| Other Line Shafts, Light | 1.00 | 1.25 |
| **LIVE ROLL CONVEYORS** | Refer to Factory | |
| **LOBE BLOWERS OR COMPRESSORS** | 1.25 | 1.50 |
| **LOG HAULS (Lumber)** | | |
| Incline-well Type | 1.75 | 1.75 |
| **LOOMS (Textile)** | 1.25 | 1.50 |
| **LUMBER INDUSTRY** | See Table 2 | |
| **MACHINE TOOLS** | | |
| Auxiliary Drives | 1.00 | 1.25 |
| Bending Rolls | 1.25 | 1.50 |
| Main Drives | 1.25 | 1.50 |
| Notching Press (Belted) | Refer to Factory | |
| Plate Planers | 1.75 | 2.00 |
| Punch Press (Geared) | 1.75 | 2.00 |
| Tapping machines | 1.75 | 2.00 |
| **MANGLE (Textile)** | 1.25 | 1.50 |
| **MASH TUBS (Brewing & Distilling)** | 1.25 | 1.25 |
| **MEAT GRINDERS (Food)** | 1.25 | 1.50 |
| **METAL MILLS** | | |
| Draw Bench Carriages & Main Drives | 1.25 | 1.50 |
| Pinch, Dryer & Scrubber Rolls, Reversing | Refer to Factory | |
| Slitters | 1.25 | 1.50 |
| Table Conveyors, | | |
| Non-Reversing Group Drives | 1.50 | 1.50 |
| Non-Reversing Individual Drives | 2.00 | 2.00 |
| Reversing | Refer to Factory | |
| Wire Drawing & Flattening Machines | 1.25 | 1.50 |
| Wire Winding Machines | 1.50 | 1.50 |
| **MILLS, ROTARY** | | |
| Ball and Rod Mills | | |
| with Spur Ring Gear | ... | 2.00 |
| with Helical Ring Gear | ... | 1.50 |
| Direct Connected | ... | 2.00 |
| Cement Kilns, Dryers & Coolers | ... | 1.50 |
| Pebble, Plain & Wedge Bar Mills | ... | 1.50 |
| Tumbling Barrels | 1.75 | 2.00 |
| **MIXER (Also see Agitators)** | | |
| Concrete, Cont. & Int. | 1.25 | 1.50 |
| Constant Density | 1.25 | 1.50 |
| Variable Density | 1.25 | 1.50 |
| **NAPPERS (Textile)** | 1.25 | 1.50 |
| **OIL INDUSTRY** | See Table 2 | |
| **ORE CRUSHERS** | 1.75 | 2.00 |
| **OVEN CONVEYORS** | | |
| Uniform | 1.25 | 1.25 |
| Heavy Duty | 1.25 | 1.50 |
| **PAPER MILLS** | See Table 2 | |
| ▲**PASSENGER ELEVATORS** | **Not Approved** | |
| **PEBBLE MILLS** | ... | 1.50 |
| **PLATE PLANERS** | 1.75 | 2.00 |
| **PRINTING PRESSES** | Refer to Factory | |
| **PROPORTIONING PUMPS** | 1.25 | 1.50 |
| **PUG MILLS (Clay)** | 1.25 | 1.50 |
| **PULLERS (Barge Haul)** | 1.75 | 2.00 |

| Application | Service 3 to 10 Hour | Service Over 10 Hour |
|---|---|---|
| **PUMPS** | | |
| Centrifugal | 1.25 | 1.25 |
| Proportioning | 1.25 | 1.50 |
| Reciprocating | | |
| Single Act., 3 or more Cyl. | 1.25 | 1.50 |
| Double Act., 2 or more Cyl. | 1.25 | 1.50 |
| Single Act., 1 or 2 Cyl. | Refer to Factory | |
| Double Acting, 1 Cyl. | Refer to Factory | |
| Rotary: Gear, Lobe, Vane | 1.00 | 1.25 |
| **PUNCH PRESSES (Gear Driven)** | 1.75 | 2.00 |
| **RECIPROCATING** | | |
| Conveyors & Feeders | 1.75 | 2.00 |
| **RECIPROCATING COMPRESSORS** | | |
| Multi-Cylinder | 1.50 | 1.75 |
| Single Cylinder | 1.75 | 2.00 |
| **ROD MILLS** | See Mills, Rotary | |
| **ROTARY** | | |
| Pumps | 1.00 | 1.25 |
| Screens (Sand or Gravel) | 1.25 | 1.50 |
| **RUBBER & PLASTICS INDUSTRIES** | See Table 2 | |
| **SAND MULLERS** | 1.25 | 1.50 |
| **SCREENS** | | |
| Air Washing | 1.00 | 1.25 |
| Rotary—Sand or Gravel | 1.25 | 1.50 |
| Traveling Water Intake | 1.00 | 1.25 |
| **SCREW CONVEYORS** | | |
| Uniform | 1.25 | 1.25 |
| Heavy Duty or Feeder | 1.25 | 1.50 |
| **SCUM BREAKERS (Sewage)** | 1.50 | 1.50 |
| **SEWAGE DISPOSAL** | See Table 2 | |
| **SHAKER CONVEYORS** | 1.75 | 2.00 |
| **SHEETERS (Rubber)** | . . . | 1.50 |
| **SINGLE ACTING PUMP** | | |
| 1 or 2 Cylinders | Refer to Factory | |
| 3 or more Cylinders | 1.25 | 1.50 |
| ▲**SKI TOWS & LIFTS** | **Not Approved** | |
| ▲**SKIP HOIST** | 1.25 | 1.50 |
| **SLAB PUSHERS** | 1.50 | 1.50 |
| **SLITTERS (Metal)** | 1.25 | 1.50 |
| **SLUDGE COLLECTORS (Sewage)** | 1.25 | 1.25 |
| **SOAPERS (Textile)** | 1.25 | 1.50 |
| **SPINNERS (Textile)** | 1.25 | 1.50 |
| **STEERING GEARS** | Refer to Factory | |
| **STOKERS** | 1.00 | 1.25 |
| **STONE CRUSHERS** | 1.75 | 2.00 |
| **SUGAR INDUSTRY** | See Table 2 | |
| **TABLE CONVEYORS (Non-Reversing)** | | |
| Group Drives | 1.50 | 1.50 |
| Individual Drives | 2.00 | 2.00 |
| Reversing | Refer to Factory | |
| **TENTER FRAMES (Textile)** | 1.25 | 1.50 |
| **TEXTILE INDUSTRY** | See Table 2 | |
| **THICKENERS (Sewage)** | 1.50 | 1.50 |
| **TUMBLING BARRELS** | 1.75 | 2.00 |
| **VACUUM FILTERS (Sewage)** | 1.50 | 1.50 |
| **VANE BLOWERS** | 1.25 | 1.50 |
| **WINCHES (Dredges)** | 1.25 | 1.50 |
| **WINDERS (Textile)** | 1.25 | 1.50 |
| **WINDLASS** | Refer to Factory | |
| **WIRE** | | |
| Drawing Machines | 1.25 | 1.50 |
| Winding Machines | 1.50 | 1.50 |

▲ Selection of Rexnord products for applications whose primary purpose is the transportation of people is not approved. This includes such applications as freight or passenger elevators, escalators, man lifts, work lift platforms and ski tows and ski lifts. If the primary purpose of the application is material conveyance and occasionally people are transported, the Rexnord warranty may remain in effect provided the design load conditions are not exceeded and certification to the appropriate safety codes and load conditions has been obtained by the system designer or end user from the appropriate enforcement authorities.

Contact your local Rexnord representative for proper selection of a Falk™ RAM ® mixer drive.



© Rexnord Industries, LLC, 1998, 2009.

# How to Select an A-Plus Drive

**Before making a selection, please refer to Basic Information and Conditions Affecting Selections on Pages 5 and 6, and note in particular the paragraphs referring to Gear Drive Rating, Application Adjusted Thermal Rating, and Speed Variation.**

Information Required

The following basic information is required to select an A-Plus gear drive for your application.

**Prime Mover**

- Type – electric or hydraulic motor or engine
- Power rating in hp or kW
- Speed – constant or variable
- Mounting position – if inclined
- Dimensions – if Rexnord will furnish motor mounting accessory or coupling

**Driven Machine**

- Type – conveyor, kiln, etc.
- Power load, brake hp, or required torque
- Speed
- Service – Hours per day; reversals per minute if reversing; minutes per hour (duty cycle) if not continuous

**Gear Drive**

- Type – parallel shaft or right angle
- Horizontal or vertical output shaft
- Ambient temperature at drive location
- Altitude above sea level
- Ambient air velocity at drive location

**Shaft Connections**

- Shaft diameters and key sizes
- Overhung loads – diameter and type of sheave, sprocket, or pinion
- Thrust load and direction

## General Selection Procedure

The general selection procedure consists of the following steps:

1. Select the type of drive – parallel shaft, right-angle, horizontal or vertical output shaft.
2. Determine drive size using either the horsepower selection method or the torque selection method.
3. Check thermal rating of the selected drive to determine if it is sufficient for the application. If necessary, select a cooling device (fan, cooling tubes, etc.) or a larger drive with sufficient thermal capacity.
4. If there are external shaft loads (overhung load and thrust) check to determine if they are within the drive ratings.

Horsepower Selection Method

Selection with the horsepower selection method is based on the power rating of the prime mover. The procedure is:

1. Determine the Service Factor for the application from Tables 2 or 3 on Pages 7 and 8. These tables apply for electric motor driven applications operating between 3 and 10 hours or over 10 hours per day. For occasional and intermittent service, or for engine driven applications refer to Table 1, Page 7.
2. Calculate equivalent horsepower by multiplying the prime mover horsepower by the Service Factor determined in step 1. If momentary or peak load will exceed 200% of the rated load, refer to the paragraph Excessive Overloads under Conditions Affecting Selection on Page 6.
3. Determine the gear drive ratio by dividing the high speed shaft rpm by the low speed shaft rpm.
4. Select the size and nearest standard ratio from the Horsepower Rating Table for parallel shaft drives, Pages 18 through 33, or for right-angle drives, Pages 68 through 77. Opposite the high speed shaft rpm, and the desired ratio and output speed, trace right to a horsepower rating that equals or exceeds the equivalent horsepower calculated in Step 2. Read the size of the gear drive at the top of the column. For ratings at speeds higher than 1750 rpm, contact your local Rexnord district office. For ratings at speeds below 580 rpm, reduce the rating proportionately.

## Torque Selection Method

Simply follow the steps outlined in the horsepower method, substituting torque values for horsepower values.

To check thermal capacity, convert the actual required torque to horsepower and check against the thermal rating. To convert, use the torque (lb-in) and speed (rpm) at low speed shaft of the drive in the following formula:

$$hp = \frac{\text{Torque (lb - in) x Output Speed (rpm)}}{63{,}000}$$

© Rexnord Industries,LLC, 1998, 2009.

## Checking Thermal Rating

Checking the thermal rating is extremely important. If the drive creates heat faster than it can be dissipated, it will overheat, and severe damage may occur.

The thermal rating of a drive is the actual power in horsepower (without Service Factor) that a drive can transmit continually for three hours or more without overheating.

Thermal ratings must be considered when the continuous operating period exceeds 3 hours, or if operation exceeds 3 hours and the running time is greater than the shutdown time.

## Application Adjusted Thermal Rating

The application adjusted thermal rating must be greater than the actual power transmitted through the gear drive (frequently the power rating of the driving motor is used rather than the actual power transmitted). To determine the application adjusted thermal rating, look up the basic thermal rating for the drive size and ratio selected, Pages 34 through 39 for parallel shaft drives and 78 through 80 for right-angle drives). Determine the application adjusted thermal rating by using the appropriate correction factors (Tables 4-8). Compare the actual power rating required (without Service Factor) with the application adjusted thermal rating. If the actual power rating exceeds the application adjusted thermal rating, shaft fans, electric fans, or cooling tubes may be added, an optional heat exchanger package may be added, or a larger drive may be selected. Review all the footnotes for the basic thermal rating to be certain which cooling accessories are available for the selected drive.

Application adjusted thermal rating is determined using the following:

$P_{TA} = B_1 \times B_2 \times B_3 \times B_4 \times B_5 \times P_T$ where:

- $P_{TA}$ = application adjusted thermal rating
- $P_T$ = Basic thermal rating from the tables in this selection guide
- $B_1$ = Ambient temperature factor from Table 4
- $B_2$ = Altitude factor from Table 5 (used only for air cooling)
- $B_3$ = Ambient air velocity factor from Table 6 (used only if no auxiliary cooling is used)
- $B_4$ = Inlet water temperature factor from Table 7 (used only when cooling tubes are selected)
- $B_5$ = Duty cycle factor from Table 8

## Table 4 — Ambient Temperature Factor – $B_1$

(For all cooling methods.)

| Ambient Temperature ★ | Factor with or without Shaft or Electric Fan | Factor with Cooling Tubes |
|---|---|---|
| 50°F | 1.19 | 1.06 |
| 60°F | 1.13 | 1.04 |
| 70°F | 1.07 | 1.02 |
| 80°F | 1.00 | 1.00 |
| 90°F | .93 | .98 |
| 100°F | .85 | .96 |
| 110°F | .78 | .94 |
| 120°F | .69 | .91 |

★ Factors for other ambient temperatures can be interpolated.

## Table 5 — Altitude Factor – $B_2$

(For air cooling only, no cooling tubes)

| Altitude — ft Sea Level = 0 | Factor with or without Auxiliary Cooling |
|---|---|
| 0 to 2,500 | 1.00 |
| 2,500 | .95 |
| 5,000 | .90 |
| 7,500 | .85 |
| 10,000 | .81 |
| 12,500 | .76 |
| 15,000 | .72 |
| 17,500 | .68 |

## Table 6 — Ambient Air Velocity Factor – $B_3$

(For no auxiliary cooling only.)

| Sustained Ambient Air Velocity† – fpm | Installed Environment | Factor Without Shaft or Electric Fan or Cooling Tubes |
|---|---|---|
| Less than 100 fpm (1 mph) | Small Confined Space | .75 |
| Between 100 fpm & 275 fpm (1 to 3 mph) | Large Indoor Room | 1.00 |
| Between 275 fpm & 725 fpm (3 to 8 mph) | Large Indoor Room | 1.40 |
| Greater than 725 fpm (8 mph) | Outdoors | 1.90 |

† The sustained ambient air velocity must be a continuous flow of air directly onto the gear drive. If the air flow cannot be counted on to be continuous, an ambient air velocity factor of 1.00 must be used.

## Table 7 — Inlet Water Temperature Factor – $B_4$

(For drives with cooling tubes only.)

| Inlet Water Temperature | Factor with Cooling Tubes Only |
|---|---|
| 50°F | 1.11 |
| 60°F | 1.05 |
| 70°F | 1.00 |
| 80°F | .94 |
| 90°F | .88 |
| 100°F | .83 |

## Table 8 — Duty Cycle Factor ‡ – $B_5$

(For all cooling methods.)

| % Operating Time Per Hour | Factor With or Without Auxiliary Cooling |
|---|---|
| 100% | 1.00 |
| 80% | 1.05 |
| 60% | 1.15 |
| 40% | 1.35 |
| 20% | 1.80 |

‡ The duty cycle factor must be based on the percentage of each hour that the drive is operating. For example: a gear drive operating for 48 minutes and resting for 12 minutes every hour of the day has an 80% duty cycle, but a drive operating for four hours and resting for four hours has a 100% duty cycle. Where % run time per hour falls between values shown above, use next higher % run time.


© Rexnord Industries, LLC, 1998, 2009.

## Shaft Ratings

High speed and low speed shaft ratings should be checked if the application involves an applied bending moment, for example a sheave, sprocket, pinion, or some type of rigid coupling on either shaft. In addition, drives with vertical low speed shafts should be checked to determine if any thrust that could be applied to the shaft is within the limits of the shaft.

Shaft ratings for parallel shaft drives are found on Pages 40 through 47. Right-angle drive shaft ratings are found on Pages 81 through 84. Instructions for using these ratings are also found on these pages.

## Horsepower Selection Example

A draw bench requiring 135 brake hp operates 10 hours per day at 30 rpm, and is driven by a 150 hp, 1170 rpm electric motor. Ambient temperature at the draw bench never exceeds 90°F. The draw bench is located in a large indoor room, but air flow in the area is only 200 fpm. The high speed and low speed shafts will be connected to the drive and driven equipment with flexible shaft couplings. Select a parallel shaft gear drive for this application.

1. The Service Factor is 1.25 for a draw bench drive operating 10 hours per day from Page 8, Table 3.
2. The equivalent hp = 1.25 x 135 = 169 hp.
3. The required ratio is 1170÷ 30 = 39. The closest standard ratio is 38.44 from the Triple Reduction Selection Table on Page 26.
4. Using the Triple Reduction Selection Table on Page 26, in the 1170 rpm high speed shaft section opposite the 38.44:1 ratio and 30 rpm, trace right to 181 (nearest hp exceeding the equivalent hp of 169) and read the drive size 425 at the top of the column.
5. The basic thermal capacity for a 425A3, 38.44:1, at 1170 rpm with no auxiliary cooling from the Basic Thermal Rating Table on Page 38 is 120 hp.
6. The ambient temperature factor ($B_1$) is 0.93 from Table 4, and the altitude factor ($B_2$) and ambient air velocity factor ($B_3$) are 1.0 from Tables 5 and 6. The duty cycle factor ($B_5$) is 1.0 from Table 8.
7. The application adjusted thermal capacity is 120 x .93 x 1 x 1 x 1 = 111.6 hp. This is not adequate because the actual brake hp is 135 hp.
8. The basic thermal capacity for a 425A3, 38.44:1 with two shaft fans is 170 hp. This is adequate since 158.1 (170 x .93 x 1 x 1) is greater than the 135 hp required. *Note that the ambient air factor ($B_3$) is no longer used the in the calculation of application adjusted thermal capacity because the drive is now fan cooled.*
9. Shaft ratings do not need to be checked because the drive is connected by flexible couplings at both the high speed and low speed shafts. Refer to Factory coupling selection guides for coupling selections.

## Torque Selection Example

A dredge requires 190,000 lb-in. torque at its output shaft, and operates at 13 rpm. The winch is in service 10 hours per day and is driven by a flexible coupling-connected 50 hp, 1170 rpm electric motor. The ambient temperature never exceeds 100°F. Although the dredge operates outdoors, the average sustained wind velocity is only 5 mph. The dredge operates on the Great Lakes which can be considered to be near sea level. The winch never operates more than 45 minutes in any given hour. The space available is best suited to a right-angle gear drive. Select a gear drive for this application.

1. The Service Factor is 1.25 for a dredge winch drive operating 10 hours per day from Page 8, Table 3 under Winches (Dredges).
2. The equivalent torque is 1.25 x 190,000 = 237,500 lb-in.
3. The required ratio is 1170÷ 13 = 90. The closest standard ratio is 86.5 from the quadruple reduction selection table on Page 75.
4. Using the Quadruple Reduction Table on Page 75, in the 1170 rpm high speed shaft section opposite 85.60:1 ratio and 13.5 rpm, trace right to 253 ( x 1000, nearest torque exceeding the equivalent torque of 237,500 lb-in) and read the drive size 405 at the top of the column.
5. The basic thermal capacity with no auxiliary cooling for a 405, 86.50:1 at 1170 rpm from the table on Page 80 is 56.2 hp. The ambient temperature factor ($B_1$) from Table 4, Page 10, is .85. The altitude correction factor ($B_2$) is 1.0 from Table 5, Page 10. The ambient air velocity factor ($B_3$) is 1.4 from Table 6, Page 10. The duty cycle is 75% (45 min/60 min), so the duty cycle factor is 1.05 from Table 8, Page 10.
6. The application adjusted thermal capacity is 56.2 x 0.85 x 1.0 x 1.4 x 1.05 = 70.2 hp which exceeds the hp rating of the motor (50 hp). Therefore, no additional cooling is required.
7. Shaft ratings do not need to be checked because the drive is connected by flexible couplings at both the high speed and low speed shafts. Refer to Rexnord coupling selection guides for coupling selections.

© Rexnord Industries,LLC, 1998, 2009.

# Accessory & Option Information

## Cooling Accessories

### Shaft Driven Cooling Fans

Shaft driven cooling fans have been successfully used on electric motors and other related machinery for many years. They eliminate the need for water or electrically powered cooling, pumps, external piping or wiring. Less than 0.25% of cataloged power rating is required to drive the fans. Shaft driven fans are available for use with A and AR parallel shaft drives and AB, ABR, and ABX right-angle drives. Mounting locations and dimensions are shown on Pages 98-100.

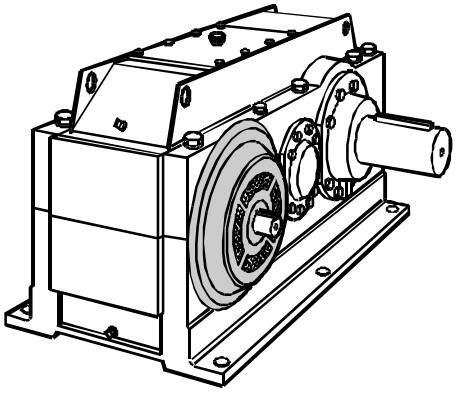

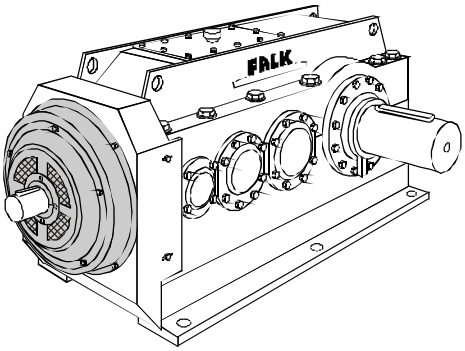


### Electric Cooling Fans

Electric fans achieve greater thermal capacities than shaft driven fans, and include a temperature switch to turn off the fan when it is not required. Mounting locations and dimensions are shown on Pages 103-105. The following electric fan motor packages are available for all sizes and reductions:

60 Hz, 3-Phase, 220/380 VAC
60 Hz, 3-Phase, 265/460 VAC
50 Hz, 3-Phase, 220/380 VAC

Pre-selected fan motor packages at 60 Hz, Single Phase, 110 VAC or 220 VAC may also be available, see Electric Cooling Fan Selection Guide 131-320 for details.

Electric fan motor packages not conforming to the above are also available, but must be specially selected. Consult Rexnord for price and delivery.

The electric fan motor starter is not included in electric fan motor packages offered by Rexnord.

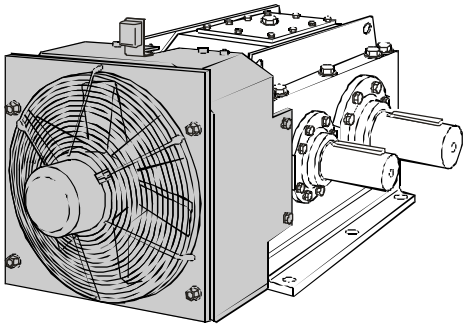

### Cooling Tubes

Falk cooling tubes are an economical alternative for thermal requirements that are beyond the capability of fans. A series of straight, finned tubes are provided directly in the oil sump of the

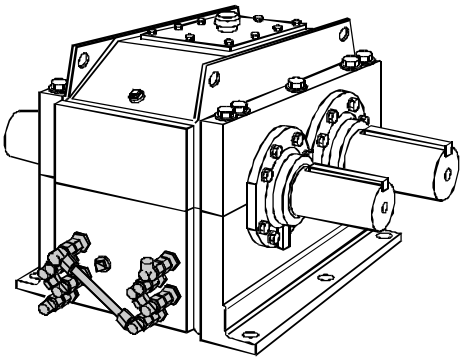

drive. Water is circulated through these tubes to cool the oil. Since there are no joints or connections inside the drive, leakage of water into the oil sump is eliminated. The thermal ratings shown in this selection guide are for 70°F(21°C) inlet water temperature. Refer to Table 7 on Page 10 for determining thermal ratings with other cooling water temperatures. Dimensions are shown on Pages 106-109.

Water flow rates to attain cooling tube basic thermal ratings as shown on Pages 36 – 39, and Pages 78 – 80 are as follows:

Sizes 305 through 535 = 2 gallons per minute
Sizes 545 through 585 = 5 gallons per minute

### Pump & Cooler Assemblies

Falk offers Pump & Cooler Assemblies when requirements exceed the thermal capacity of shaft fans, electric fans or cooling tubes.

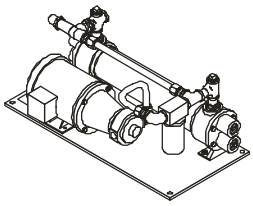

For detailed information, refer to the following Selection Guides:

131-310, Type PC Pump & Cooler Assemblies (Water/Oil)
131-315, Type PA Pump & Cooler Assemblies (Air/Oil)


© Rexnord Industries, LLC, 1998, 2009.

# Motor Attachment Accessories

## Motor Brackets

Falk™ motor brackets are selectively pre-designed for types A, AR, AXV, ABR and ABX. These motor brackets provide an economical "soft" mounting for standard NEMA T- and U-frame and IEC B3 induction motors. It is expected that the weight, location, and starting torque of the motor will cause cantilevered motor brackets to deflect or twist to varying degrees. The gear drive/motor/coupling selections found in Rexnord selection materials are engineered to be within acceptable deflection limits as determined by Rexnord. However, because the motor bracket is a "soft" motor support, deflection and vibration magnitudes of the bracket may exceed levels normally considered acceptable for rigidly, "hard" mounted machinery.

For detailed information on motor brackets, see motor bracket dimension sheets as follows:
Type A, Engineering 137-650
Type AR, Dimensions 135-554 & 135-556
Type AXV, Dimensions 135-564 & 135-566
Type ABR, Dimensions 235-672 & 235-674
Type ABX, Dimensions 235-676 & 235-678

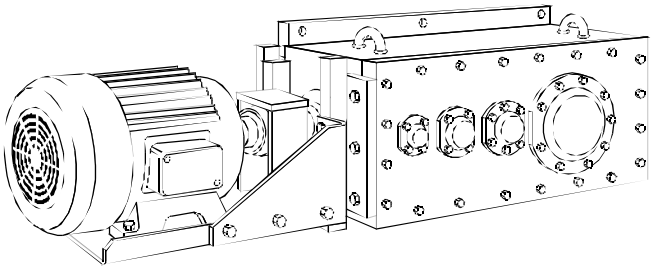

## Motor Mounts

Falk™ motor mounts are selectively pre-designed for types ABR and ABX drives. Motor mounts provide a convenient drive support for the motor when the drive is belt or chain driven.

For detailed information on motor mounts, see motor mount dimension sheets as follows:
Type ABR, Dimensions 235-652 & 235-654
Type ABX, Dimensions 235-662

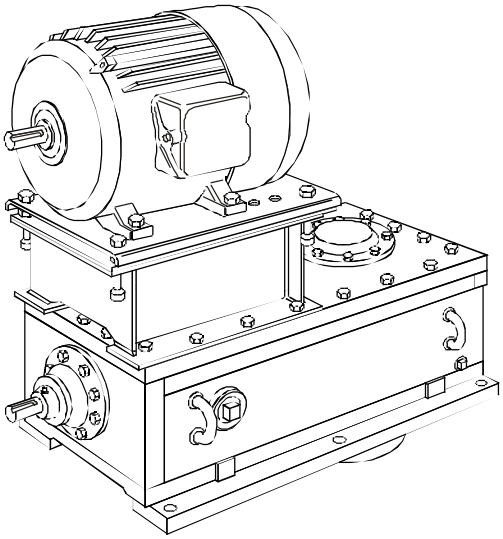

## Flanged Motor Adapters

Falk™ flanged motor adapters are available for types AR, AXV, ABR, and ABX drives. This adapter allows a flange-mounted motor to be directly mounted to the high speed side of the drive. Contact Rexnord for further details on this accessory.

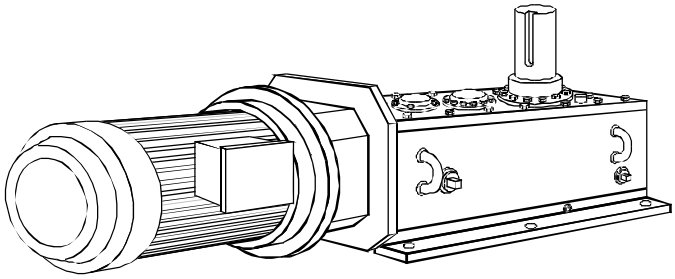

## Bedplates

A bedplate is recommended to insure proper alignment of the drive with the motor. Rexnord offers a complete line of fabricated steel bedplates for all popular sizes of standard Type A and AB drives. These bedplates accommodate standard NEMA and IEC motors within the power range of the drive and many of the larger non NEMA motors. Special bedplates can be designed and manufactured for unique motor and special accessory combinations.

Versatile welded steel construction permits rapid modification of standard bedplates by addition or deletion. Supports for tachometers, brakes, timing devices, foot-mounted fluid couplings, or other accessories can also be added. Contact Rexnord for further details on this accessory.

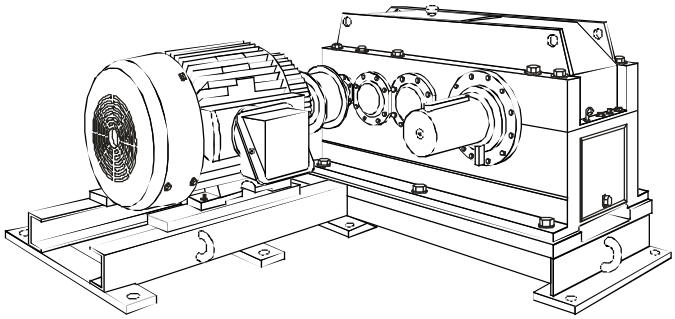

## Orange Peel® Guards

Orange Peel's patented trim-and-fit design revolutionizes equipment guard convenience and value, so you can get the job-site safety you want without the expense and long lead times of custom engineered guards.

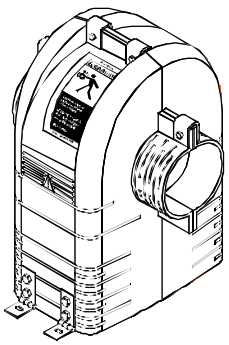

© Rexnord Industries,LLC, 1998, 2009.

## Backstops

Backstops prevent reverse rotation or backrun without backlash for conveyors, elevator head shafts, and similar applications. Rexnord offers a standard line of accessory backstops for use on types A, AR, AB, and ABR drives.

These accessory backstops are mounted externally on an extension of either the high speed (A and AR) or an intermediate shaft (AB and ABR). When type A parallel shaft drives are equipped with accessory backstop mounted at the high speed shaft, only one shaft driven fan can be mounted; the two shaft fan option is not available.

See Falk™ Backstop Selection Guide (136-610) for availability, selection, and dimensions of Falk™ accessory backstops for types A and AR parallel shaft gear drives. For dimensions of pre-selected accessory backstops for type AB right angle shaft gear drives, see dimension sheet 235-610. For heavy duty backstopping requirements, refer to Falk NRT Low Speed Backstop Selection Guide (561-110).

When specifying accessory backstops, the overrunning direction of rotation is defined as clockwise or counterclockwise when facing the rotating end of the low speed shaft extension.

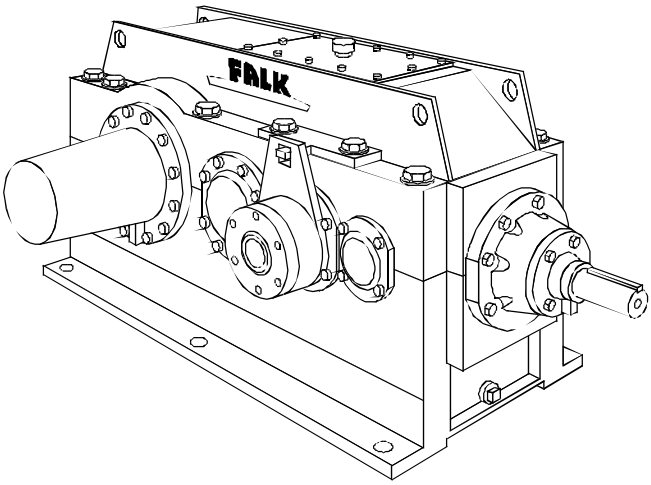


## Dry Well Feature

### (Types AXVD, AXVQ, ABXD & ABXQ)

For vertical low speed shaft types listed above, a dry well at the low speed shaft is incorporated as standard. In this case the lower bearing is grease lubricated, and the low speed seal does not retain a head of oil.

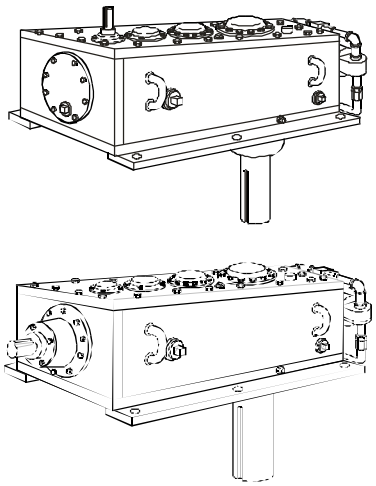

## Alignment Free Drive Package

The Alignment Free Drive is a standard packaged drive developed by Falk to meet the demands of surface and underground belt conveyor applications. The drive comprises a unitized motor, coupling (fluid or flexible) and right-angle gear drive that mounts directly to the conveyor drive shaft and is supported by a single torque arm. It is simple to install, eliminates the cost of expensive mounting pads, and offers the mobility required for today's conveyor systems. For more information about the Alignment Free Drive refer to the Falk Alignment Free Drives Selection Guide (231-210).

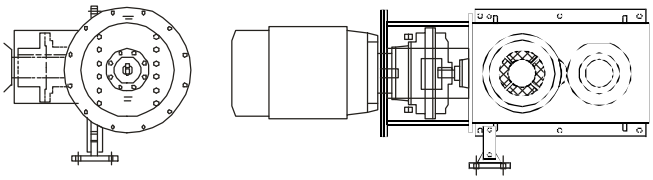

## Airmax® Breather & Sealed Dipstick

A Falk™ exclusive, the Airmax is specially designed to allow the drive to breathe, while excluding airborne particles and moisture. For the full benefit of the Airmax, also specify the sealed dipstick feature. For further details, see Selection Guide 111-210.

## Magnetic Drain Plug

The magnetic drain plug attracts harmful metal particles and provides early warning of abnormal wear. Magnetic drain plugs are furnished as standard for Drive Types A, AR, AXV, AB, ABR & ABX as follows:
Drive Sizes 305-345 = 1.00"-11.5 NPT Drain Plug
Drive Sizes 365-585 = 1.25"-11.5 NPT Drain Plug


© Rexnord Industries, LLC, 1998, 2009.

# Gear Drive Nomenclature

| 425 | AR | J | 4 | C | G | 413.7 |
|---|---|---|---|---|---|---|
| Drive Size | Type ★ | Mounting | Reductio | Model A, B, C, | | Ratio Exact Ratio Expressed |

| Drive Size | Type | Mounting |
|---|---|---|
| | A = Parallel Shaft, Horizontal | + Foot Mounted, Solid LSS |
| 305 | AM = Parallel Shaft, Horizontal | + Shaft Mounted, Solid LSS, Moment Connection, Torque Arm |
| 325 | AR = Parallel shaft, Horizontal | + Flange Mounted, Solid LSS |
| 345 | ARM = Parallel Shaft, Horizontal | + Shaft Mounted, Solid LSS, Moment Connection, Torque Arm |
| 365 | ARJ = Parallel Shaft, Horizontal | + Shaft Mounted, Hollow LSS w/Shrink Disc, Torque Arm |
| 385 | AXVQ | = Parallel Shaft, Vertical + Foot Mounted, Hollow LSS w/Keeper |
| 405 | Plate | |
| 425 | AXVD = Parallel Shaft, Vertical | + Foot Mounted, Solid LSS (Down) |
| 445 | AXVU = Parallel Shaft, Vertical | + Foot Mounted, Solid LSS (Up) |
| 465 | AB = Right Angle, Horizontal | + Foot Mounted, Solid LSS |
| 485 | ABM = Right Angle, Horizontal | + Shaft Mounted, Solid LSS, Moment Connection, Bedplate & Torque Arm |
| 505 | ABR = Right Angle, Horizontal | + Flange Mounted, Solid LSS |
| 525 | ABRM = Right Angle, Horizontal | + Shaft Mounted, Solid LSS, Moment Connection, Torque Arm |
| 535 | ABRJ = Right Angle, Horizontal | + Shaft Mounted, Hollow LSS w/Shrink Disc, Torque Arm |
| 545 | ABXQ = Right Angle, Vertical | + Foot Mounted, Hollow LSS w/Keeper Plate |
| 555 | ABXD = Right Angle, Vertical | + Foot Mounted, Solid LSS (Down) |
| 565 | ABXU = Right Angle, Vertical | + Foot Mounted, Solid LSS (Up) |
| 585 | | |

Variations
A = With Backstop
B = With Fan(s)
C = With Backstop & Fan(s)
D = With Double Ended LSS
E = With Single EndedHSS
F = With Flanged Motor Adapter
G = With Motor Mount
H = With Tie Rod
R = With Any Combination of Variations
S = Special Features
T = With Cooling Tubes
Z = With Motor Bracket

★ See Availability Table below for availability of drive types.

## Parallel Shaft Gear Drives

A - Foot mounted
Solid shaft

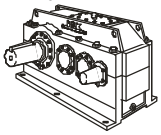

AM - Shaft mounted
Solid shaft with Moment Connection

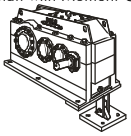

AR - Flange mounted
Solid shaft

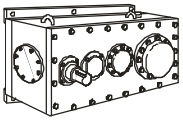

ARM - Shaft mounted
Solid shaft with Moment Connection

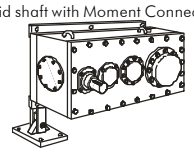

ARJ - Shaft mounted
Hollow shaft with Shrink disc

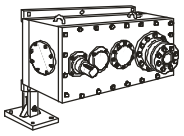

AXVQ - Foot mounted
Hollow Shaft with Keeper plate

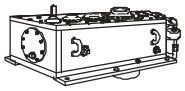

AXVD - Foot mounted
Solid shaft (down)

AXVU - Foot mounted
Solid shaft (up)

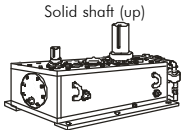

## Right Angle Shaft Gear Drives

AB - Foot mounted
Solid shaft

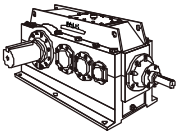

ABM - Shaft mounted
Bedplate/Solid shaft with Moment Connection

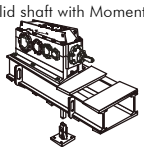

ABR - Flange mounted
Solid shaft

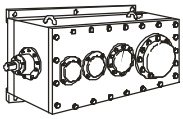

ABRM - Shaft mounted
Solid shaft with Moment Connection

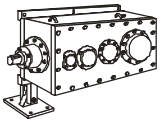

ABRJ - Shaft mounted
Hollow shaft with Shrink disc

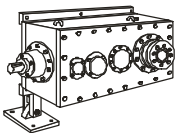

ABXQ - Foot mounted
Hollow shaft with Keeper plate

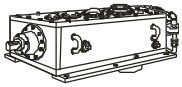

ABXD - Foot mounted
Solid shaft (down)

ABXU - Foot mounted
Solid shaft (up)

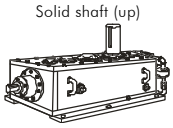

## Availability Table (by Type and Reduction)

(An" X" indicates that the gear drive type and reduction are available for a given size.)

| DRIVE SIZE | TYPE AND REDUCTION | | | | | | | | | | | | | | | | |
|---|---|---|---|---|---|---|---|---|---|---|---|---|---|---|---|---|---|
| | A1 | A2 | A3 | A4 | AR2 | AR3 | AR4 | AXV2 | AXV3 | AXV4 | AB2 | AB3 | AB4 | ABR3 | ABR4 | ABX3 | ABX4 |
| 305 | X | X | X | | | | | | | | | | | | | | |
| 325 | X | X | X | | | | | | | | | | | | | | |
| 345 | X | X | X | | | | | | | | | | | | | | |
| 365 | X | X | X | | | | | | | | | | | | | | |
| 385 | X | X | X | X | . . . | . . . | . . . | . . . | . . . | . . . | X | X | X | | | | |
| 405 | X | X | X | X | X | X | X | X | X | X | X | X | X | X | X | X | X |
| 425 | X | X | X | X | X | X | X | X | X | X | X | X | X | X | X | X | X |
| 445 | X | X | X | X | X | X | X | X | X | X | X | X | X | X | X | X | X |
| 465 | X | X | X | X | X | X | X | X | X | X | X | X | X | X | X | X | X |
| 485 | X | X | X | X | X | X | X | X | X | X | X | X | X | X | X | X | X |
| 505 | X | X | X | X | X | X | X | X | X | X | X | X | X | X | X | X | X |
| 525 | X | X | X | X | . . . | . . . | . . . | . . . | . . . | . . . | X | X | X | | | | |
| 535 | . . . | . . . | . . . | . . . | X | X | X | X | X | X | . . . | . . . | . . . | X | X | X | X |
| 545 | . . . | X | X | . . . | . . . | . . . | . . . | . . . | . . . | . . . | . . . | X | X | | | | |
| 555 | . . . | . . . | . . . | . . . | X | X | X | X | X | X | . . . | . . . | . . . | X | X | X | X |
| 565 | . . . | X | X | . . . | . . . | . . . | . . . | . . . | . . . | . . . | . . . | X | X | | | | |
| 585 | . . . | X | X | . . . | . . . | . . . | . . . | . . . | . . . | . . . | . . . | X | X | | | | |

© Rexnord Industries,LLC, 1998, 2009.

# How to Order an A-Plus Drive

The following information is required to order an A-Plus drive to meet your requirements. Much of the information is also used to make a selection and is repeated here in case a selection will be made by a Rexnord district office. Note that it is not necessary to specify nomenclature, as described on Page 15, when ordering an A-plus drive.

### Drive

- Size, type and ratio.
- Input and output speed (rpm).
- Service Factor for application.
- External shaft loads – thrust and overhung load.
- Factors affecting thermal performance – ambient temperature, altitude, ambient air velocity, duty cycle, and inlet water temperature (if cooling water is to be used).
- Auxiliary equipment required – couplings, backstops, etc.
- Mounting position and shaft assembly number (see Pages 17 for parallel shaft drives and 67 for right-angle drives).

### Motor – Prime Mover

- Type – motor or engine.
- Power rating – hp or kW.
- Speed – rpm.
- Frame size – dimension prints if Rexnord is to furnish mounting surface and/or mount the equipment.
- Motor – type, class, weight, or any special characteristics (such as brakemotor, explosion-proof, etc.).
- Identify if motor is to be furnished or installed by Rexnord.

### Driven Machine

- Required power or torque.
- Speed – rpm.
- Application description – belt conveyor, agitator, etc.
- Service – duty cycle, hours per day, reversals per minute if reversing.
- Ambient temperature and operating conditions – outdoor, taconite dust, etc.

### Auxiliary Equipment

- Motors – if Rexnord is to furnish provide complete specifications.
- Bedplates – supply drawing of motor and any auxiliary equipment not supplied by Rexnord.
- Flanged motor adapters or motor brackets – supply drawing of motor.
- Motor mount – supply drawing of motor and the required belt centers and mounting arrangement.
- Backstops – specify direction of rotation of the low speed shaft (CW or CCW) when looking toward the drive from the low speed end.
- Electric fan position.
- Couplings – specify size, type, drive and driven hub bores and keyways.

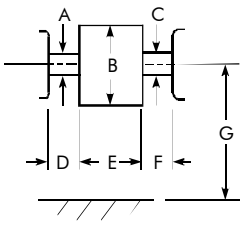


B & E...Max Cplg Dim
D & F...Exposed Shaft

- Coupling guards – furnish description of couplings and/or other equipment to be guarded, and all dimensions A through G below.

### Special or specification requirements

Advise Rexnord of any special project related specifications such as: noise level specifications, bearing $L_{10}$ requirements, etc.

## Type A Assemblies

### Drives with Rifle Drilled Low Speed Shaft for Air Clutch

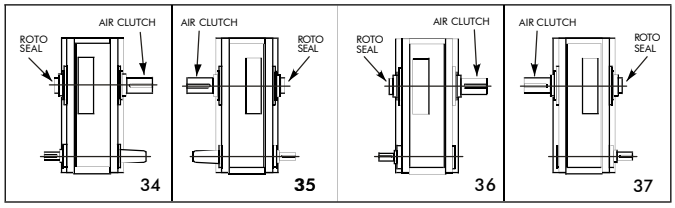



© Rexnord Industries, LLC, 1998, 2009.

Type A, AR, ARJ, & AXV

# Shaft Assemblies & Rotations

Drives with rifle drilled low speed shaft for air clutch — See Page 16.

Please specify from the views below, the desired assembly number. High speed shaft overhung load capacities published on Pages 41 through 45 apply to either high speed shaft extension. The low speed shaft overhung load capacities published on Pages 45 and 46 apply to the low speed shaft extensions below with heavy arrows. Published overhung load capacities may be increased when an outboard bearing is used. Consult Rexnord for overhung load capacities of low speed shaft extensions without the heavy arrow, as they are less than the heavy arrow extensions.

Contact Rexnord for inclined, wall mounted, or other non-standard orientations.

***CAUTION: All (A1) single reduction gear drive selections*** *— Due to the narrow centers dimensions (distance between H.S. shaft centerline and L.S. shaft centerline) associated with single reduction gear drives, check for possible interference of H.S. shaft and H.S. shaft accessories with L.S. shaft and L.S. shaft accessories.*

## Type A Assemblies

### Standard Assemblies

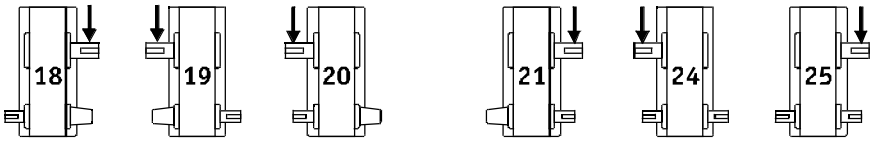


### Other Available Assemblies

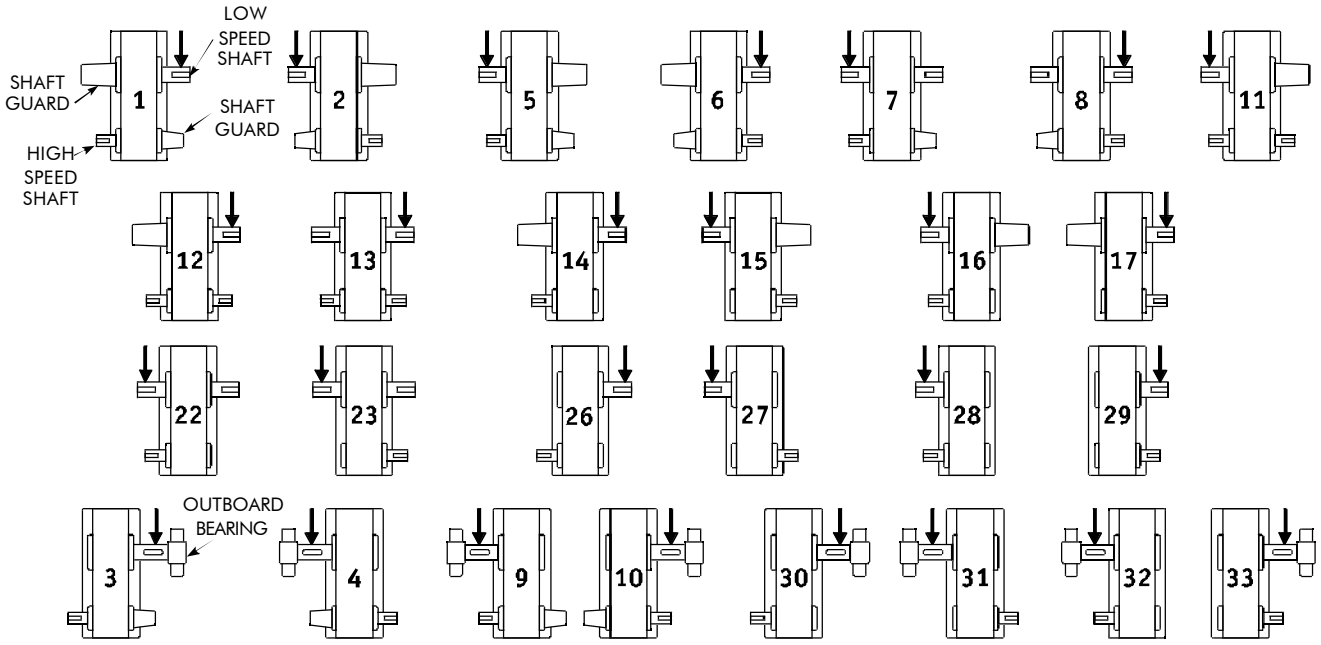


## Type AR Assemblies (Viewed from H.S. end)

### Double and Triple Reduction

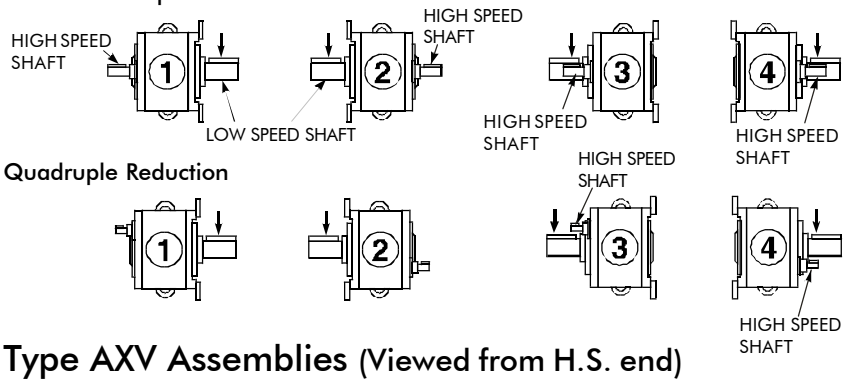


### Quadruple Reduction




## Type ARJ Assemblies (Viewed from H.S. End)

### Double & Triple Reduction

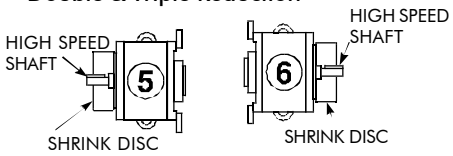


### Quadruple Reduction

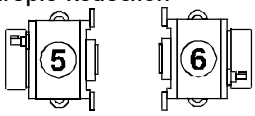


## Type AXV Assemblies (Viewed from H.S. end)

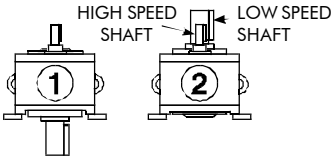


## Rotations

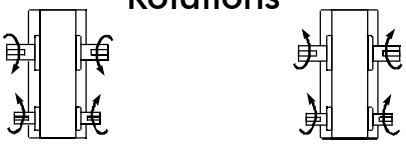

Single & Triple Reduction
A, AR,ARJ, AXV Gear Drives

Double & Quadruple Reduction
A, AR,ARJ, AXV Gear Drives

© Rexnord Industries,LLC, 1998, 2009.

## Type A Parallel Shaft

# Horsepower Ratings/Single Reduction

| High Speed Shaft rpm | Nominal Ratios ±3% | Approx. Low Speed Shaft rpm | DRIVE SIZE | | | | | | | | | | | |
|---|---|---|---|---|---|---|---|---|---|---|---|---|---|---|
| | | | 305 | 325 | 345 | 365 | 385 | 405 | 425 | 445 | 465 | 485 | 505 | 525 |
| 1750 | 1.84 | 950 | 579 | 688 | 1082 | 1375 | 1785 | 2893 | 4503 | 5093 | 7437 | 10689 | 13594 | 18755 † |
| | 2.03 | 860 | 568 | 661 | 1040 | 1272 | 1631 | 2748 | 3822 | 4471 | 6843 | 9659 | 12051 | 17817 † |
| | 2.25 | 780 | 517 | 609 | 958 | 1166 | 1768 | 2459 | 3917 | 4248 | 6545 | 9712 | 12034 | 17712 † |
| | 2.49 | 700 | 491 | 582 | 917 | 1114 | 1533 | 2238 | 3584 | 3660 | 5530 | 9511 | 12090 | 16869 † |
| | 2.76 | 640 | 465 | 530 | 834 | 1009 | 1443 | 2170 | 3094 | 3845 | 5446 | 8590 | 11254 | 14074 † |
| | 3.05 | 575 | 414 | 503 | 792 | 956 | 1314 | 1958 | 2913 | 3653 | 4543 | 7831 | 9472 | 12831 † |
| | 3.38 | 520 | 379 | 451 | 709 | 903 | 1263 | 2073 | 2731 | 3208 | 4276 | 7516 | 8842 | 12514 † |
| | 3.74 | 470 | 362 | 424 | 668 | 797 | 1160 | 1873 | 2549 | 2965 | 4008 | 7366 | 9547 | 11731 † |
| | 4.13 | 420 | 328 | 398 | 531 | 744 | 1046 | 1506 | 2219 | 2780 | 3475 | 6048 | 8355 | 11569 † |
| | 4.57 | 380 | 276 | 370 | 494 | 691 | 960 | 1396 | 1991 | 2505 | 3670 | 5848 | 7500 | 10435 † |
| | 5.06 | 350 | 217 | 318 | 498 | 653 | 802 | 1149 | 1673 | 2244 | 3319 | 5242 | 7285 | 9247 † |
| | 5.60 | 310 | 193 | 293 | 444 | 608 | | | | | | | | |
| 1430 | 1.84 | 780 | 502 | 597 | 906 | 1194 | 1549 | 2511 | 3910 | 4422 | 6457 | 9280 | 11802 | 16283 † |
| | 2.03 | 700 | 493 | 574 | 903 | 1104 | 1416 | 2386 | 3318 | 3882 | 5941 | 8386 | 10462 | 15468 † |
| | 2.25 | 640 | 449 | 529 | 832 | 1013 | 1535 | 2135 | 3400 | 3688 | 5682 | 8432 | 10448 | 15377 † |
| | 2.49 | 575 | 426 | 506 | 796 | 967 | 1331 | 1943 | 3112 | 3177 | 4801 | 8257 | 10496 | 14646 † |
| | 2.76 | 520 | 404 | 460 | 724 | 876 | 1253 | 1884 | 2686 | 3338 | 4728 | 7457 | 9770 | 12219 † |
| | 3.05 | 470 | 359 | 437 | 673 | 830 | 1141 | 1700 | 2529 | 3171 | 3944 | 6799 | 8224 | 11140 † |
| | 3.38 | 420 | 329 | 391 | 616 | 784 | 1096 | 1773 | 2371 | 2785 | 3712 | 6526 | 7676 | 10864 † |
| | 3.74 | 380 | 315 | 368 | 580 | 692 | 1007 | 1585 | 2213 | 2574 | 3480 | 6395 | 8288 | 10185 † |
| | 4.13 | 350 | 285 | 345 | 461 | 646 | 864 | 1230 | 1814 | 2414 | 3017 | 5251 | 7253 | 10044 † |
| | 4.57 | 310 | 229 | 321 | 428 | 600 | 798 | 1144 | 1627 | 2175 | 3186 | 5077 | 6511 | 9060 † |
| | 5.06 | 280 | 180 | 265 | 415 | 567 | 668 | 949 | 1367 | 1833 | 2882 | 4433 | 5953 | 7556 † |
| | 5.60 | 255 | 160 | 243 | 370 | 518 | | | | | | | | |
| 1170 | 1.84 | 640 | 436 | 519 | 741 | 1037 | 1346 | 2182 | 3397 | 3842 | 5611 | 8064 | 10255 | 14149 |
| | 2.03 | 575 | 429 | 499 | 741 | 959 | 1231 | 2073 | 2883 | 3373 | 5162 | 7287 | 9091 | 13441 |
| | 2.25 | 520 | 390 | 459 | 723 | 880 | 1334 | 1855 | 2955 | 3205 | 4938 | 7327 | 9079 | 13362 |
| | 2.49 | 470 | 371 | 439 | 691 | 840 | 1157 | 1688 | 2704 | 2761 | 4172 | 7175 | 9120 | 12727 |
| | 2.76 | 420 | 351 | 400 | 629 | 761 | 1088 | 1637 | 2334 | 2901 | 4108 | 6480 | 8490 | 10618 |
| | 3.05 | 380 | 312 | 380 | 552 | 721 | 991 | 1477 | 2197 | 2756 | 3427 | 5908 | 7146 | 9680 |
| | 3.38 | 350 | 286 | 340 | 535 | 681 | 953 | 1450 | 2060 | 2420 | 3226 | 5670 | 6670 | 9441 |
| | 3.74 | 310 | 272 | 320 | 504 | 601 | 875 | 1306 | 1886 | 2237 | 3024 | 5486 | 7202 | 8850 |
| | 4.13 | 280 | 239 | 300 | 401 | 561 | 720 | 1024 | 1493 | 2097 | 2621 | 4563 | 6303 | 8375 |
| | 4.57 | 255 | 190 | 271 | 372 | 521 | 664 | 954 | 1349 | 1890 | 2769 | 4299 | 5638 | 7504 |
| | 5.06 | 230 | 149 | 220 | 345 | 485 | 555 | 790 | 1141 | 1511 | 2504 | 3627 | 4871 | 6182 |
| | 5.60 | 210 | 132 | 201 | 307 | 431 | | | | | | | | |

† Gear drives at 1750 rpm require jet lubrication and special labyrinth seals; gear drives at 1430 rpm require jet lubrication, refer to Factory.


© Rexnord Industries, LLC, 1998, 2009.

## Type A Parallel Shaft

# Torque Ratings/Single Reduction

(POUND-INCHES AT LOW SPEED SHAFT. . . MULTIPLY VALUES LISTED BY 1000)

| High Speed Shaft rpm | Nominal Ratios ±3% | Approx. Low Speed Shaft rpm | DRIVE SIZE | | | | | | | | | | | |
|---|---|---|---|---|---|---|---|---|---|---|---|---|---|---|
| | | | 305 | 325 | 345 | 365 | 385 | 405 | 425 | 445 | 465 | 485 | 505 | 525 |
| 1750 | 1.84 | 950 | 39.0 | 46.7 | 73.4 | 90.0 | 121 | 187 | 296 | 333 | 482 | 696 | 912 | 1249 † |
| | 2.03 | 860 | 41.8 | 48.5 | 76.4 | 94.0 | 121 | 198 | 282 | 330 | 503 | 714 | 893 | 1317 † |
| | 2.25 | 780 | 42.8 | 49.6 | 78.0 | 97.0 | 141 | 203 | 317 | 338 | 525 | 783 | 1003 | 1457 † |
| | 2.49 | 700 | 43.7 | 51.4 | 81.0 | 99.0 | 140 | 201 | 312 | 333 | 488 | 839 | 1088 | 1488 † |
| | 2.76 | 640 | 45.6 | 53.4 | 82.6 | 101 | 146 | 214 | 314 | 388 | 526 | 859 | 1096 | 1436 † |
| | 3.05 | 575 | 46.6 | 55.3 | 87.0 | 105 | 147 | 211 | 315 | 395 | 500 | 846 | 1068 | 1386 † |
| | 3.38 | 520 | 46.4 | 55.4 | 87.1 | 107 | 149 | 243 | 328 | 401 | 510 | 917 | 1091 | 1464 † |
| | 3.74 | 470 | 48.4 | 56.3 | 88.7 | 109 | 153 | 243 | 334 | 400 | 529 | 967 | 1267 | 1520 † |
| | 4.13 | 420 | 48.1 | 58.3 | 79.2 | 111 | 155 | 220 | 336 | 407 | 529 | 914 | 1289 | 1692 † |
| | 4.57 | 380 | 45.0 | 60.3 | 82.1 | 115 | 154 | 221 | 328 | 399 | 586 | 962 | 1267 | 1653 † |
| | 5.06 | 350 | 39.6 | 59.5 | 92.2 | 119 | 140 | 199 | 301 | 415 | 574 | 944 | 1349 | 1602 † |
| | 5.60 | 310 | 38.9 | 60.3 | 89.8 | 121 | | | | | | | | |
| 1430 | 1.84 | 780 | 41.3 | 49.6 | 75.2 | 95.0 | 128 | 199 | 315 | 354 | 512 | 740 | 969 | 1327 † |
| | 2.03 | 700 | 44.4 | 51.6 | 81.2 | 99.0 | 129 | 210 | 299 | 351 | 535 | 758 | 949 | 1399 † |
| | 2.25 | 640 | 45.5 | 52.7 | 82.9 | 103 | 149 | 216 | 337 | 359 | 558 | 831 | 1066 | 1548 † |
| | 2.49 | 575 | 46.4 | 54.7 | 86.1 | 105 | 148 | 214 | 332 | 354 | 518 | 891 | 1156 | 1581 † |
| | 2.76 | 520 | 48.5 | 56.7 | 87.7 | 108 | 155 | 227 | 334 | 412 | 559 | 913 | 1165 | 1525 † |
| | 3.05 | 470 | 49.4 | 58.8 | 90.5 | 112 | 157 | 225 | 334 | 419 | 531 | 899 | 1135 | 1472 † |
| | 3.38 | 420 | 49.3 | 58.8 | 92.6 | 114 | 159 | 254 | 348 | 426 | 542 | 974 | 1159 | 1556 † |
| | 3.74 | 380 | 51.5 | 59.8 | 94.2 | 116 | 163 | 251 | 355 | 425 | 562 | 1028 | 1346 | 1615 † |
| | 4.13 | 350 | 51.2 | 61.8 | 84.1 | 118 | 157 | 220 | 336 | 432 | 562 | 972 | 1369 | 1798 † |
| | 4.57 | 310 | 45.7 | 64.1 | 87.0 | 122 | 157 | 222 | 328 | 424 | 623 | 1022 | 1346 | 1756 † |
| | 5.06 | 280 | 40.2 | 60.7 | 94.0 | 127 | 143 | 201 | 301 | 415 | 609 | 976 | 1349 | 1602 † |
| | 5.60 | 255 | 39.5 | 61.2 | 91.5 | 126 | | | | | | | | |
| 1170 | 1.84 | 640 | 43.9 | 52.7 | 75.2 | 101 | 136 | 211 | 334 | 376 | 544 | 786 | 1029 | 1409 |
| | 2.03 | 575 | 47.2 | 54.8 | 81.4 | 105 | 137 | 223 | 318 | 372 | 568 | 805 | 1008 | 1486 |
| | 2.25 | 520 | 48.3 | 55.9 | 88.0 | 110 | 159 | 229 | 358 | 381 | 592 | 883 | 1132 | 1645 |
| | 2.49 | 470 | 49.4 | 58.0 | 91.3 | 112 | 158 | 227 | 353 | 376 | 550 | 947 | 1228 | 1679 |
| | 2.76 | 420 | 51.4 | 60.3 | 93.1 | 114 | 165 | 241 | 355 | 437 | 594 | 969 | 1237 | 1620 |
| | 3.05 | 380 | 52.5 | 62.5 | 90.7 | 119 | 166 | 239 | 355 | 445 | 564 | 954 | 1206 | 1564 |
| | 3.38 | 350 | 52.4 | 62.5 | 98.3 | 121 | 169 | 254 | 370 | 452 | 575 | 1035 | 1231 | 1652 |
| | 3.74 | 310 | 54.4 | 63.5 | 100 | 123 | 173 | 253 | 370 | 452 | 597 | 1077 | 1430 | 1716 |
| | 4.13 | 280 | 52.5 | 65.7 | 89.5 | 125 | 160 | 224 | 338 | 459 | 597 | 1032 | 1455 | 1832 |
| | 4.57 | 255 | 46.4 | 66.1 | 92.4 | 129 | 160 | 226 | 332 | 451 | 662 | 1058 | 1425 | 1778 |
| | 5.06 | 230 | 40.7 | 61.6 | 95.5 | 132 | 145 | 205 | 307 | 418 | 647 | 976 | 1349 | 1602 |
| | 5.60 | 210 | 39.8 | 61.8 | 92.8 | 129 | | | | | | | | |

† Gear drives at 1750 rpm require jet lubrication and special labyrinth seals; gear drives at 1430 rpm require jet lubrication, refer to Factory.

© Rexnord Industries,LLC, 1998, 2009.

Type A Parallel Shaft

# Horsepower Ratings/Single Reduction

| High Speed Shaft rpm | Nominal Ratios ±3% | Approx. Low Speed Shaft rpm | DRIVE SIZE | | | | | | | | | | | |
|---|---|---|---|---|---|---|---|---|---|---|---|---|---|---|
| | | | 305 | 325 | 345 | 365 | 385 | 405 | 425 | 445 | 465 | 485 | 505 | 525 |
| 870 | 1.84 | 470 | 324 | 389 | 551 | 821 | 1094 | 1773 | 2761 | 3123 | 4560 | 6554 | 8335 | 11499 |
| | 2.03 | 430 | 324 | 389 | 551 | 780 | 1000 | 1685 | 2343 | 2741 | 4196 | 5922 | 7388 | 10924 |
| | 2.25 | 390 | 317 | 373 | 551 | 715 | 1084 | 1508 | 2401 | 2605 | 4013 | 5955 | 7379 | 10860 |
| | 2.49 | 350 | 301 | 357 | 551 | 683 | 940 | 1372 | 2198 | 2244 | 3391 | 5831 | 7412 | 10343 |
| | 2.76 | 320 | 282 | 325 | 511 | 618 | 885 | 1331 | 1897 | 2357 | 3339 | 5266 | 6900 | 8629 |
| | 3.05 | 290 | 250 | 308 | 422 | 586 | 806 | 1201 | 1786 | 2240 | 2785 | 4801 | 5808 | 7867 |
| | 3.38 | 260 | 226 | 276 | 435 | 553 | 774 | 1108 | 1609 | 1967 | 2622 | 4319 | 5421 | 7672 |
| | 3.74 | 235 | 206 | 260 | 408 | 489 | 685 | 997 | 1436 | 1818 | 2458 | 4080 | 5853 | 7193 |
| | 4.13 | 210 | 181 | 241 | 326 | 456 | 546 | 779 | 1140 | 1705 | 2130 | 3480 | 5067 | 6228 |
| | 4.57 | 190 | 143 | 205 | 298 | 424 | 503 | 725 | 1028 | 1536 | 2094 | 3203 | 4193 | 5580 |
| | 5.06 | 175 | 112 | 166 | 261 | 368 | 420 | 600 | 868 | 1153 | 1899 | 2724 | 3636 | 4597 |
| | 5.60 | 155 | 99.5 | 152 | 232 | 327 | | | | | | | | |
| 720 | 1.84 | 390 | 268 | 322 | 456 | 679 | 958 | 1553 | 2303 | 2715 | 3994 | 5741 | 7301 | 10072 |
| | 2.03 | 350 | 268 | 322 | 456 | 679 | 876 | 1476 | 2052 | 2401 | 3675 | 5188 | 6472 | 9568 |
| | 2.25 | 320 | 268 | 322 | 456 | 626 | 949 | 1321 | 2004 | 2281 | 3515 | 5216 | 6463 | 9512 |
| | 2.49 | 290 | 264 | 313 | 456 | 598 | 823 | 1202 | 1902 | 1966 | 2970 | 5108 | 6493 | 9060 |
| | 2.76 | 260 | 236 | 285 | 425 | 542 | 775 | 1140 | 1659 | 2065 | 2925 | 4613 | 6044 | 7559 |
| | 3.05 | 235 | 209 | 258 | 354 | 513 | 681 | 1052 | 1517 | 1962 | 2440 | 4206 | 5087 | 6891 |
| | 3.38 | 210 | 189 | 242 | 371 | 485 | 665 | 930 | 1353 | 1723 | 2296 | 3574 | 4748 | 6721 |
| | 3.74 | 190 | 172 | 228 | 342 | 428 | 573 | 836 | 1206 | 1593 | 2153 | 3386 | 4878 | 6300 |
| | 4.13 | 175 | 151 | 202 | 281 | 400 | 456 | 652 | 956 | 1442 | 1866 | 2922 | 4228 | 5154 |
| | 4.57 | 155 | 120 | 171 | 249 | 359 | 420 | 607 | 861 | 1326 | 1762 | 2701 | 3523 | 4629 |
| | 5.06 | 140 | 93.6 | 138 | 218 | 307 | 351 | 501 | 726 | 967 | 1596 | 2293 | 3065 | 3843 |
| | 5.60 | 130 | 82.9 | 126 | 193 | 273 | | | | | | | | |
| 580 | 1.84 | 320 | 216 | 259 | 367 | 547 | 824 | 1335 | 1855 | 2187 | 3433 | 4819 | 6013 | 8658 |
| | 2.03 | 290 | 216 | 259 | 367 | 547 | 753 | 1268 | 1764 | 2064 | 3159 | 4459 | 5563 | 8225 |
| | 2.25 | 260 | 216 | 259 | 367 | 538 | 813 | 1135 | 1647 | 1961 | 3012 | 4483 | 5555 | 8157 |
| | 2.49 | 235 | 215 | 259 | 367 | 514 | 708 | 1033 | 1561 | 1689 | 2553 | 4382 | 5581 | 7681 |
| | 2.76 | 210 | 192 | 243 | 343 | 466 | 660 | 932 | 1358 | 1740 | 2514 | 3965 | 5195 | 6497 |
| | 3.05 | 190 | 170 | 210 | 289 | 441 | 555 | 859 | 1241 | 1639 | 2097 | 3615 | 4373 | 5923 |
| | 3.38 | 175 | 153 | 208 | 303 | 417 | 542 | 759 | 1106 | 1434 | 1974 | 2933 | 4081 | 5777 |
| | 3.74 | 155 | 139 | 192 | 278 | 368 | 466 | 681 | 984 | 1318 | 1850 | 2785 | 3998 | 5327 |
| | 4.13 | 140 | 122 | 164 | 229 | 343 | 371 | 531 | 779 | 1178 | 1604 | 2397 | 3473 | 4226 |
| | 4.57 | 130 | 97.0 | 139 | 202 | 292 | 341 | 494 | 701 | 1083 | 1442 | 2213 | 2890 | 3808 |
| | 5.06 | 115 | 75.8 | 112 | 177 | 250 | 285 | 408 | 591 | 788 | 1304 | 1877 | 2510 | 3156 |
| | 5.60 | 105 | 67.2 | 103 | 157 | 222 | | | | | | | | |


© Rexnord Industries, LLC, 1998, 2009.

## Type A Parallel Shaft

# Torque Ratings/Single Reduction

(POUND-INCHES AT LOW SPEED SHAFT. . . MULTIPLY VALUES LISTED BY 1000)

| High Speed Shaft rpm | Nominal Ratios ±3% | Approx. Low Speed Shaft rpm | DRIVE SIZE | | | | | | | | | | | |
|---|---|---|---|---|---|---|---|---|---|---|---|---|---|---|
| | | | 305 | 325 | 345 | 365 | 385 | 405 | 425 | 445 | 465 | 485 | 505 | 525 |
| 870 | 1.84 | 470 | 43.9 | 53.1 | 75.2 | 107 | 149 | 231 | 365 | 411 | 594 | 859 | 1125 | 1540 |
| | 2.03 | 430 | 48.0 | 57.5 | 81.4 | 115 | 149 | 244 | 347 | 407 | 621 | 880 | 1101 | 1624 |
| | 2.25 | 390 | 52.8 | 61.1 | 90.2 | 120 | 174 | 251 | 391 | 417 | 647 | 965 | 1237 | 1798 |
| | 2.49 | 350 | 53.9 | 63.5 | 97.9 | 122 | 172 | 248 | 385 | 411 | 602 | 1034 | 1342 | 1835 |
| | 2.76 | 320 | 55.6 | 65.9 | 102 | 125 | 180 | 263 | 388 | 478 | 649 | 1059 | 1352 | 1770 |
| | 3.05 | 290 | 56.6 | 68.1 | 93.3 | 130 | 182 | 261 | 388 | 487 | 617 | 1043 | 1318 | 1709 |
| | 3.38 | 260 | 55.6 | 68.2 | 107 | 132 | 184 | 261 | 388 | 494 | 629 | 1060 | 1346 | 1806 |
| | 3.74 | 235 | 55.4 | 69.4 | 109 | 135 | 182 | 260 | 379 | 494 | 653 | 1078 | 1563 | 1875 |
| | 4.13 | 210 | 53.4 | 71.0 | 97.8 | 137 | 163 | 229 | 347 | 502 | 653 | 1058 | 1573 | 1832 |
| | 4.57 | 190 | 46.9 | 67.2 | 99.6 | 142 | 163 | 231 | 340 | 493 | 673 | 1060 | 1425 | 1778 |
| | 5.06 | 175 | 41.1 | 62.5 | 97.2 | 135 | 148 | 209 | 314 | 429 | 660 | 986 | 1354 | 1602 |
| | 5.60 | 155 | 40.3 | 62.9 | 94.3 | 131 | | | | | | | | |
| 720 | 1.84 | 390 | 43.8 | 53.1 | 75.2 | 107 | 158 | 245 | 368 | 432 | 629 | 909 | 1191 | 1630 |
| | 2.03 | 350 | 48.0 | 57.5 | 81.4 | 121 | 158 | 258 | 368 | 431 | 657 | 932 | 1166 | 1718 |
| | 2.25 | 320 | 53.9 | 63.7 | 90.2 | 127 | 184 | 265 | 395 | 441 | 685 | 1021 | 1310 | 1902 |
| | 2.49 | 290 | 57.1 | 67.2 | 97.9 | 130 | 182 | 263 | 403 | 435 | 637 | 1095 | 1420 | 1942 |
| | 2.76 | 260 | 56.2 | 69.8 | 102 | 132 | 191 | 273 | 410 | 506 | 687 | 1121 | 1431 | 1874 |
| | 3.05 | 235 | 57.1 | 68.9 | 94.6 | 137 | 186 | 276 | 398 | 515 | 653 | 1104 | 1395 | 1809 |
| | 3.38 | 210 | 56.2 | 72.2 | 111 | 140 | 191 | 264 | 395 | 523 | 665 | 1060 | 1424 | 1911 |
| | 3.74 | 190 | 55.9 | 73.6 | 110 | 142 | 184 | 263 | 384 | 523 | 691 | 1081 | 1574 | 1984 |
| | 4.13 | 175 | 53.9 | 71.9 | 102 | 145 | 165 | 232 | 351 | 513 | 691 | 1074 | 1585 | 1832 |
| | 4.57 | 155 | 47.6 | 67.8 | 101 | 145 | 164 | 234 | 344 | 514 | 684 | 1080 | 1446 | 1782 |
| | 5.06 | 140 | 41.5 | 62.8 | 98.1 | 136 | 149 | 211 | 318 | 434 | 670 | 1003 | 1379 | 1618 |
| | 5.60 | 130 | 40.6 | 63.0 | 94.8 | 132 | | | | | | | | |
| 580 | 1.84 | 320 | 43.9 | 53.0 | 75.1 | 107 | 168 | 261 | 368 | 432 | 671 | 947 | 1217 | 1740 |
| | 2.03 | 290 | 48.0 | 57.4 | 81.3 | 121 | 169 | 275 | 392 | 460 | 701 | 994 | 1244 | 1834 |
| | 2.25 | 260 | 54.0 | 63.6 | 90.1 | 135 | 195 | 283 | 403 | 471 | 729 | 1090 | 1397 | 2025 |
| | 2.49 | 235 | 57.8 | 69.1 | 97.8 | 138 | 195 | 281 | 411 | 464 | 679 | 1166 | 1516 | 2044 |
| | 2.76 | 210 | 56.8 | 73.9 | 102 | 141 | 202 | 277 | 416 | 529 | 733 | 1196 | 1527 | 2000 |
| | 3.05 | 190 | 57.7 | 69.6 | 95.8 | 146 | 188 | 280 | 404 | 534 | 697 | 1178 | 1488 | 1930 |
| | 3.38 | 175 | 56.5 | 77.1 | 112 | 149 | 193 | 268 | 400 | 541 | 710 | 1080 | 1520 | 2039 |
| | 3.74 | 155 | 56.1 | 76.9 | 111 | 152 | 186 | 266 | 389 | 537 | 737 | 1103 | 1601 | 2083 |
| | 4.13 | 140 | 54.0 | 72.4 | 103 | 154 | 166 | 234 | 355 | 520 | 737 | 1094 | 1617 | 1865 |
| | 4.57 | 130 | 47.8 | 68.4 | 101 | 146 | 165 | 236 | 348 | 521 | 695 | 1099 | 1473 | 1820 |
| | 5.06 | 115 | 41.8 | 63.3 | 98.9 | 138 | 150 | 213 | 321 | 439 | 680 | 1019 | 1402 | 1650 |
| | 5.60 | 105 | 40.9 | 63.9 | 95.8 | 134 | | | | | | | | |

© Rexnord Industries,LLC, 1998, 2009.

# Type A, AR & AXV Parallel Shaft
# Horsepower Ratings/Double Reduction

| High Speed Shaft rpm | Nominal Ratios ±4% | Approx. Low Speed Shaft rpm | DRIVE SIZE 305 | 325 | 345 | 365 | 385 | 405 | 425 | 445 | 465 | 485 | 505 | 525 | 535 | 545 | 555 | 565 | 585 |
|---|---|---|---|---|---|---|---|---|---|---|---|---|---|---|---|---|---|---|---|
| 1750 | **5.60** | **310** | . . . | . . . | . . . | . . . | 628 | 919 | 1215 | 1668 | 2453 | 3688 | 5080 | 6976 | 7245 | 9010 | 9217 | 11022 | 15272 |
| | **6.20** | **280** | 159 | 242 | 408 | 505 | 624 | 920 | 1215 | 1496 | 2323 | 3533 | 4766 | 6676 | 6965 | 8190 | 8948 | 10135 | 14232 |
| | **6.86** | **255** | 159 | 228 | 389 | 455 | 577 | 883 | 1215 | 1442 | 2179 | 3363 | 5004 | 6036 | 6394 | 7868 | 7922 | 9559 | 14541 |
| | **7.59** | **230** | 159 | 214 | 348 | 429 | 561 | 815 | 1054 | 1365 | 1965 | 3074 | 4240 | 5777 | 6027 | 7142 | 7766 | 8875 | 11969 |
| | **8.40** | **210** | 159 | 215 | 324 | 402 | 512 | 769 | 1054 | 1296 | 1843 | 2925 | 4386 | 5087 | 5385 | 7001 | 6806 | 8273 | 12331 |
| | **9.30** | **190** | 135 | 175 | 308 | 375 | 484 | 716 | 924 | 1226 | 1740 | 2625 | 3899 | 4807 | 5364 | 6179 | 6706 | 7987 | 11974 |
| | **10.29** | **170** | 120 | 179 | 275 | 351 | 426 | 669 | 924 | 1099 | 1632 | 2498 | 3756 | 4231 | 5087 | 6055 | 6292 | 7453 | 10900 |
| | **11.39** | **155** | 119 | 154 | 216 | 338 | 401 | 632 | 896 | 1039 | 1433 | 2346 | 3336 | 4436 | 4807 | 5373 | 5844 | 6779 | 10316 |
| | **12.61** | **140** | 113 | 146 | 216 | 304 | 384 | 550 | 781 | 991 | 1404 | 2232 | 3240 | 4151 | 4231 | 5264 | 5469 | 6403 | 9944 |
| | **13.95** | **125** | 91.8 | 137 | 216 | 286 | 322 | 524 | 739 | 937 | 1237 | 1975 | 2742 | 3831 | 4151 | 4724 | 5190 | 6019 | 8148 |
| | **15.44** | **115** | 94.4 | 136 | 191 | 268 | 309 | 441 | 592 | 852 | 1186 | 1882 | 2876 | 3439 | 3439 | 4625 | 4760 | 5575 | 8401 |
| | **17.09** | **100** | 75.8 | 110 | 168 | 253 | 279 | 419 | 633 | 805 | 1045 | 1661 | 2577 | 3242 | 3439 | 4307 | 4474 | 5050 | 8090 |
| | **18.91** | **90** | 70.6 | 109 | 159 | 201 | 267 | 370 | 579 | 729 | 1101 | 1609 | 2365 | 2973 | 3242 | 4014 | 4230 | 4805 | 7645 |
| | **20.93** | **84** | 59.9 | 88.3 | 140 | 201 | 214 | 323 | 463 | 635 | 999 | 1448 | 2204 | 2690 | 3030 | 3819 | 3956 | 4295 | 6597 |
| | **23.16** | **75** | 56.2 | 87.0 | 131 | 191 | . . . | Consult Factory | | | | | | | | | | | |
| | **25.63** | **68** | 51.1 | 72.7 | 119 | 164 | . . . | | | | | | | | | | | | |
| | **28.36** | **60** | 45.4 | 66.5 | 106 | 157 | | | | | | | | | | | | | |
| | **31.39** | **56** | 36.9 | 61.7 | 94.4 | 136 | | | | | | | | | | | | | |
| | **34.74** | **50** | 36.4 | 56.5 | 88.5 | 121 | | | | | | | | | | | | | |
| 1430 | **5.60** | **255** | . . . | . . . | . . . | . . . | 513 | 798 | 1055 | 1448 | 2130 | 3202 | 4411 | 6057 | 6290 | 7822 | 8002 | 9569 | 13259 |
| | **6.20** | **230** | 130 | 210 | 348 | 439 | 510 | 798 | 1055 | 1299 | 2017 | 3067 | 4137 | 5796 | 6047 | 7110 | 7768 | 8799 | 12356 |
| | **6.86** | **210** | 130 | 198 | 337 | 395 | 485 | 767 | 1055 | 1252 | 1892 | 2920 | 4345 | 5240 | 5551 | 6831 | 6878 | 8299 | 12624 |
| | **7.59** | **190** | 130 | 186 | 303 | 372 | 458 | 708 | 915 | 1185 | 1706 | 2669 | 3681 | 5015 | 5232 | 6201 | 6742 | 7705 | 10391 |
| | **8.40** | **170** | 130 | 187 | 282 | 349 | 419 | 667 | 915 | 1125 | 1600 | 2540 | 3808 | 4417 | 4675 | 6078 | 5909 | 7183 | 10705 |
| | **9.30** | **155** | 111 | 152 | 254 | 325 | 395 | 621 | 803 | 1064 | 1511 | 2279 | 3385 | 4174 | 4657 | 5364 | 5822 | 6934 | 10395 |
| | **10.29** | **140** | 98.7 | 148 | 227 | 305 | 348 | 552 | 790 | 954 | 1417 | 2169 | 3261 | 3673 | 4416 | 5257 | 5462 | 6470 | 9463 |
| | **11.39** | **125** | 97.5 | 127 | 179 | 288 | 328 | 527 | 732 | 902 | 1244 | 2036 | 2896 | 3851 | 4173 | 4665 | 5073 | 5886 | 8956 |
| | **12.61** | **115** | 92.0 | 127 | 179 | 264 | 314 | 458 | 653 | 860 | 1219 | 1937 | 2813 | 3604 | 3673 | 4570 | 4748 | 5559 | 8634 |
| | **13.95** | **100** | 75.4 | 119 | 178 | 249 | 263 | 431 | 604 | 813 | 1074 | 1715 | 2381 | 3326 | 3604 | 4101 | 4506 | 5226 | 7074 |
| | **15.44** | **90** | 77.2 | 112 | 157 | 233 | 252 | 366 | 484 | 740 | 1029 | 1634 | 2497 | 2985 | 2985 | 4016 | 4133 | 4840 | 7293 |
| | **17.09** | **84** | 62.2 | 90.7 | 138 | 220 | 228 | 345 | 517 | 699 | 907 | 1442 | 2237 | 2776 | 2985 | 3739 | 3884 | 4385 | 7023 |
| | **18.91** | **75** | 58.3 | 89.2 | 131 | 167 | 218 | 304 | 473 | 633 | 956 | 1397 | 1972 | 2462 | 2758 | 3485 | 3672 | 4171 | 6637 |
| | **20.93** | **68** | 49.1 | 72.5 | 115 | 167 | 175 | 266 | 379 | 522 | 868 | 1231 | 1817 | 2219 | 2503 | 3316 | 3435 † | 3545 | 5447 |
| | **23.16** | **60** | 46.3 | 71.9 | 109 | 157 | . . . | Consult Factory | | | | | | | | | | | |
| | **25.63** | **56** | 41.8 | 59.6 | 97.7 | 134 | . . . | | | | | | | | | | | | |
| | **28.36** | **50** | 37.2 | 54.5 | 87.0 | 130 | | | | | | | | | | | | | |
| | **31.39** | **45** | 30.4 | 50.6 | 77.9 | 111 | | | | | | | | | | | | | |
| | **34.74** | **40** | 29.8 | 46.3 | 72.5 | 98.9 | | | | | | | | | | | | | |
| 1170 | **5.60** | **210** | . . . | . . . | . . . | . . . | 423 | 694 | 917 | 1258 | 1851 | 2782 | 3833 | 5263 | 5466 | 6797 | 6953 | 8315 | 11521 |
| | **6.20** | **190** | 106 | 182 | 284 | 381 | 417 | 694 | 917 | 1129 | 1753 | 2665 | 3595 | 5037 | 5254 | 6178 | 6750 | 7646 | 10737 |
| | **6.86** | **170** | 106 | 172 | 284 | 343 | 397 | 666 | 917 | 1088 | 1644 | 2537 | 3775 | 4554 | 4824 | 5935 | 5977 | 7212 | 10970 |
| | **7.59** | **155** | 106 | 162 | 263 | 323 | 375 | 615 | 795 | 1030 | 1482 | 2319 | 3198 | 4358 | 4547 | 5388 | 5859 | 6695 | 9029 |
| | **8.40** | **140** | 106 | 162 | 239 | 304 | 343 | 580 | 779 | 978 | 1390 | 2207 | 3309 | 3838 | 4062 | 5281 | 5135 | 6241 | 9302 |
| | **9.30** | **125** | 91.4 | 132 | 210 | 283 | 323 | 516 | 675 | 925 | 1313 | 1980 | 2942 | 3627 | 4047 | 4662 | 5059 | 6026 | 9033 |
| | **10.29** | **115** | 81.3 | 122 | 187 | 260 | 285 | 456 | 646 | 829 | 1231 | 1884 | 2834 | 3192 | 3838 | 4568 | 4746 | 5623 | 8223 |
| | **11.39** | **100** | 79.8 | 104 | 149 | 236 | 268 | 435 | 599 | 784 | 1081 | 1770 | 2516 | 3347 | 3626 | 4054 | 4408 | 5114 | 7783 |
| | **12.61** | **90** | 75.3 | 104 | 149 | 229 | 257 | 381 | 534 | 748 | 1060 | 1684 | 2445 | 3132 | 3192 | 3971 | 4126 | 4831 | 7502 |
| | **13.95** | **84** | 62.0 | 103 | 146 | 216 | 216 | 355 | 494 | 707 | 933 | 1490 | 2069 | 2890 | 3132 | 3564 | 3916 | 4541 | 6147 |
| | **15.44** | **75** | 63.1 | 91.7 | 129 | 197 | 206 | 304 | 396 | 643 | 895 | 1420 | 2170 | 2594 | 2594 | 3489 | 3591 | 4206 | 6338 |
| | **17.09** | **68** | 51.1 | 74.5 | 113 | 187 | 186 | 283 | 423 | 607 | 788 | 1253 | 1944 | 2293 | 2594 | 3249 | 3375 † | 3810 | 6103 |
| | **18.91** | **60** | 48.1 | 73.2 | 107 | 138 | 178 | 250 | 387 | 550 | 798 | 1194 | 1626 | 2031 | 2277 | 3028 | 3191 † | 3625 | 5673 |
| | **20.93** | **56** | 40.3 | 59.5 | 94.2 | 138 | 143 | 218 | 310 | 429 | 722 | 1014 | 1498 | 1829 | 2066 | 2790 | 2917 † | 2928 | 4500 |
| | **23.16** | **50** | 38.2 | 59.3 | 89.8 | 129 | . . . | Consult Factory | | | | | | | | | | | |
| | **25.63** | **45** | 34.3 | 48.8 | 80.2 | 110 | . . . | | | | | | | | | | | | |
| | **28.36** | **40** | 30.5 | 44.7 | 71.4 | 106 | | | | | | | | | | | | | |
| | **31.39** | **37** | 25.0 | 41.4 | 64.3 | 91.3 | | | | | | | | | | | | | |
| | **34.74** | **34** | 24.5 | 37.9 | 59.4 | 81.1 | | | | | | | | | | | | | |

† For Size 555ARJ (hollow low speed shaft with shrink disc) the hp rating and torque rating are limited by the shrink disc, see Page 33 for instructions.

| High Speed Shaft rpm | AVAILABILITY OF TYPES A / AR / AXV DOUBLE AND TRIPLE REDUCTION<br>TYPE | 305 | 325 | 345 | 365 | 385 | 405 | 425 | 445 | 465 | 485 | 505 | 525 | 535 | 545 | 555 | 565 | 585 |
|---|---|---|---|---|---|---|---|---|---|---|---|---|---|---|---|---|---|---|
| All | **A** | X | X | X | X | X | X | X | X | X | X | X | X | . . . | X | . . . | X | X |
| | **AR** | . . . | . . . | . . . | . . . | . . . | X | X | X | X | X | X | . . . | X | . . . | X | . . . | . . . |
| | **AXV** | . . . | . . . | . . . | . . . | . . . | X | X | X | X | X | X | . . . | X | . . . | X | . . . | . . . |


© Rexnord Industries, LLC, 1998, 2009.

# Type A, AR & AXV Parallel Shaft
# Torque Ratings/Double Reduction

(POUND-INCHES AT LOW SPEED SHAFT. . . MULTIPLY VALUES LISTED BY 1000)

| High Speed Shaft rpm | Nominal Ratios ±4% | Approx. Low Speed Shaft rpm | DRIVE SIZE 305 | 325 | 345 | 365 | 385 | 405 | 425 | 445 | 465 | 485 | 505 | 525 | 535 | 545 | 555 | 565 | 585 |
|---|---|---|---|---|---|---|---|---|---|---|---|---|---|---|---|---|---|---|---|
| 1750 | 5.60 | 310 | . . . | . . . | . . . | . . . | 133 | 185 | 245 | 339 | 486 | 727 | 1042 | 1356 | 1487 | 1797 | 1872 | 2218 | 3178 |
| | 6.20 | 280 | 35.4 | 55.2 | 92.3 | 112 | 139 | 201 | 272 | 352 | 499 | 787 | 1070 | 1406 | 1540 | 1778 | 1967 | 2337 | 3223 |
| | 6.86 | 255 | 38.7 | 56.2 | 95.1 | 116 | 143 | 213 | 297 | 366 | 518 | 806 | 1208 | 1452 | 1623 | 1941 | 1990 | 2391 | 3589 |
| | 7.59 | 230 | 42.4 | 58.2 | 95.6 | 120 | 157 | 222 | 286 | 377 | 538 | 844 | 1157 | 1505 | 1649 | 1918 | 2112 | 2543 | 3349 |
| | 8.40 | 210 | 47.2 | 65.1 | 99.2 | 125 | 151 | 226 | 313 | 387 | 558 | 864 | 1287 | 1598 | 1648 | 2055 | 2122 | 2575 | 3760 |
| | 9.30 | 190 | 44.8 | 60.8 | 105 | 128 | 160 | 237 | 309 | 397 | 567 | 904 | 1330 | 1672 | 1768 | 2060 | 2264 | 2674 | 4003 |
| | 10.29 | 170 | 44.0 | 68.4 | 102 | 131 | 154 | 240 | 338 | 417 | 589 | 926 | 1396 | 1640 | 1813 | 2206 | 2349 | 2710 | 4120 |
| | 11.39 | 155 | 47.3 | 63.4 | 92.0 | 136 | 163 | 250 | 378 | 428 | 597 | 954 | 1441 | 1741 | 1889 | 2185 | 2406 | 2876 | 4275 |
| | 12.61 | 140 | 49.9 | 65.0 | 99.4 | 141 | 169 | 238 | 352 | 440 | 602 | 977 | 1493 | 1782 | 1861 | 2339 | 2491 | 2951 | 4312 |
| | 13.95 | 125 | 45.4 | 67.2 | 112 | 145 | 166 | 255 | 384 | 451 | 612 | 995 | 1376 | 1856 | 2013 | 2381 | 2578 | 3025 | 4052 |
| | 15.44 | 115 | 50.7 | 74.4 | 110 | 149 | 173 | 240 | 335 | 474 | 636 | 1032 | 1540 | 1886 | 1931 | 2547 | 2687 | 3013 | 4553 |
| | 17.09 | 100 | 45.6 | 69.0 | 108 | 154 | 168 | 257 | 390 | 486 | 647 | 1055 | 1617 | 2006 | 2130 | 2655 | 2754 | 3172 | 4807 |
| | 18.91 | 90 | 48.2 | 74.9 | 111 | 139 | 174 | 246 | 391 | 479 | 715 | 1112 | 1625 | 2087 | 2253 | 2693 | 2834 | 3305 | 4920 |
| | 20.93 | 84 | 45.8 | 69.7 | 109 | 152 | 152 | 235 | 340 | 484 | 701 | 1095 | 1649 | 2045 | 2277 | 2803 | 2955 | 3289 | 5105 |
| | 23.16 | 75 | 45.2 | 73.0 | 107 | 161 | . . . | Consult Factory | | | | | | | | | | | |
| | 25.63 | 68 | 46.0 | 70.0 | 109 | 152 | . . . | | | | | | | | | | | | |
| | 28.36 | 60 | 45.1 | 70.4 | 106 | 160 | | | | | | | | | | | | | |
| | 31.39 | 56 | 41.5 | 70.1 | 104 | 153 | | | | | | | | | | | | | |
| | 34.74 | 50 | 45.2 | 70.6 | 106 | 148 | | | | | | | | | | | | | |
| 1430 | 5.60 | 255 | . . . | . . . | . . . | . . . | 132 | 197 | 260 | 360 | 517 | 773 | 1107 | 1441 | 1580 | 1910 | 1989 | 2357 | 3377 |
| | 6.20 | 230 | 35.4 | 58.6 | 96.4 | 119 | 139 | 213 | 289 | 374 | 530 | 836 | 1136 | 1494 | 1636 | 1889 | 2090 | 2483 | 3424 |
| | 6.86 | 210 | 38.7 | 59.7 | 101 | 124 | 147 | 227 | 316 | 389 | 550 | 857 | 1283 | 1543 | 1725 | 2063 | 2114 | 2540 | 3813 |
| | 7.59 | 190 | 42.5 | 61.9 | 102 | 127 | 156 | 236 | 304 | 401 | 571 | 897 | 1229 | 1599 | 1752 | 2038 | 2244 | 2702 | 3558 |
| | 8.40 | 170 | 47.2 | 69.3 | 106 | 133 | 151 | 239 | 332 | 411 | 593 | 918 | 1368 | 1698 | 1751 | 2183 | 2254 | 2736 | 3995 |
| | 9.30 | 155 | 45.1 | 64.7 | 106 | 136 | 160 | 252 | 329 | 421 | 603 | 961 | 1413 | 1777 | 1879 | 2188 | 2405 | 2841 | 4252 |
| | 10.29 | 140 | 44.3 | 69.2 | 103 | 139 | 154 | 242 | 354 | 443 | 626 | 984 | 1483 | 1742 | 1926 | 2344 | 2495 | 2879 | 4377 |
| | 11.39 | 125 | 47.4 | 64.0 | 93.3 | 142 | 163 | 255 | 378 | 455 | 634 | 1013 | 1531 | 1850 | 2007 | 2322 | 2556 | 3056 | 4542 |
| | 12.61 | 115 | 49.7 | 69.2 | 101 | 150 | 169 | 242 | 360 | 467 | 640 | 1037 | 1586 | 1893 | 1977 | 2486 | 2646 | 3135 | 4581 |
| | 13.95 | 100 | 45.6 | 71.5 | 113 | 155 | 166 | 257 | 384 | 479 | 651 | 1058 | 1463 | 1972 | 2139 | 2529 | 2739 | 3214 | 4305 |
| | 15.44 | 90 | 50.8 | 74.9 | 111 | 159 | 172 | 244 | 335 | 504 | 675 | 1097 | 1636 | 2003 | 2052 | 2707 | 2855 | 3201 | 4837 |
| | 17.09 | 84 | 45.8 | 69.7 | 108 | 164 | 168 | 259 | 389 | 517 | 687 | 1121 | 1718 | 2102 | 2263 | 2821 | 2926 | 3371 | 5106 |
| | 18.91 | 75 | 48.8 | 75.0 | 112 | 142 | 174 | 248 | 390 | 509 | 759 | 1182 | 1658 | 2115 | 2345 | 2861 | 3011 | 3511 | 5227 |
| | 20.93 | 68 | 45.9 | 70.0 | 109 | 155 | 152 | 237 | 341 | 487 | 746 | 1139 | 1663 | 2065 | 2302 | 2978 | 3140 † | 3322 | 5158 |
| | 23.16 | 60 | 45.6 | 73.8 | 109 | 162 | . . . | Consult Factory | | | | | | | | | | | |
| | 25.63 | 56 | 46.0 | 70.2 | 109 | 152 | . . . | | | | | | | | | | | | |
| | 28.36 | 50 | 45.2 | 70.6 | 106 | 162 | | | | | | | | | | | | | |
| | 31.39 | 45 | 41.8 | 70.4 | 105 | 152 | | | | | | | | | | | | | |
| | 34.74 | 40 | 45.2 | 70.8 | 106 | 148 | | | | | | | | | | | | | |
| 1170 | 5.60 | 210 | . . . | . . . | . . . | . . . | 133 | 209 | 276 | 383 | 549 | 821 | 1176 | 1530 | 1678 | 2028 | 2112 | 2503 | 3586 |
| | 6.20 | 190 | 35.3 | 62.1 | 96.1 | 126 | 139 | 226 | 307 | 397 | 563 | 888 | 1207 | 1587 | 1737 | 2007 | 2220 | 2638 | 3637 |
| | 6.86 | 170 | 38.5 | 63.4 | 104 | 131 | 147 | 241 | 335 | 414 | 584 | 910 | 1363 | 1638 | 1832 | 2190 | 2246 | 2698 | 4050 |
| | 7.59 | 155 | 42.3 | 65.9 | 108 | 135 | 157 | 251 | 323 | 425 | 606 | 952 | 1305 | 1699 | 1861 | 2164 | 2383 | 2870 | 3778 |
| | 8.40 | 140 | 47.0 | 73.4 | 109 | 141 | 151 | 254 | 346 | 437 | 630 | 975 | 1452 | 1803 | 1859 | 2318 | 2395 | 2905 | 4243 |
| | 9.30 | 125 | 45.4 | 68.6 | 107 | 144 | 160 | 255 | 338 | 448 | 640 | 1020 | 1501 | 1887 | 1996 | 2324 | 2554 | 3018 | 4516 |
| | 10.29 | 115 | 44.6 | 69.7 | 104 | 145 | 154 | 245 | 353 | 471 | 664 | 1045 | 1576 | 1850 | 2046 | 2489 | 2650 | 3059 | 4649 |
| | 11.39 | 100 | 47.4 | 64.1 | 94.9 | 142 | 163 | 257 | 378 | 483 | 673 | 1077 | 1626 | 1965 | 2131 | 2466 | 2715 | 3245 | 4824 |
| | 12.61 | 90 | 49.7 | 69.2 | 103 | 159 | 169 | 246 | 360 | 496 | 680 | 1102 | 1685 | 2011 | 2099 | 2640 | 2811 | 3330 | 4865 |
| | 13.95 | 84 | 45.8 | 75.6 | 113 | 164 | 167 | 259 | 384 | 509 | 691 | 1123 | 1553 | 2094 | 2272 | 2687 | 2909 | 3413 | 4572 |
| | 15.44 | 75 | 50.7 | 75.0 | 111 | 164 | 172 | 248 | 335 | 536 | 718 | 1165 | 1738 | 2127 | 2179 | 2874 | 3032 | 3400 | 5138 |
| | 17.09 | 68 | 46.0 | 69.9 | 108 | 170 | 168 | 260 | 389 | 548 | 729 | 1190 | 1824 | 2122 | 2403 | 2996 | 3108 † | 3580 | 5424 |
| | 18.91 | 60 | 49.2 | 75.2 | 111 | 143 | 174 | 249 | 390 | 541 | 775 | 1234 | 1671 | 2133 | 2376 | 3039 | 3198 † | 3729 | 5460 |
| | 20.93 | 56 | 46.1 | 70.2 | 109 | 156 | 152 | 237 | 340 | 489 | 758 | 1147 | 1676 | 2080 | 2322 | 3062 | 3259 † | 3354 | 5209 |
| | 23.16 | 50 | 46.0 | 74.4 | 110 | 163 | . . . | Consult Factory | | | | | | | | | | | |
| | 25.63 | 45 | 46.2 | 70.3 | 109 | 152 | . . . | | | | | | | | | | | | |
| | 28.36 | 40 | 45.3 | 70.7 | 106 | 162 | | | | | | | | | | | | | |
| | 31.39 | 37 | 42.0 | 70.4 | 106 | 153 | | | | | | | | | | | | | |
| | 34.74 | 34 | 45.5 | 70.8 | 106 | 149 | | | | | | | | | | | | | |

† For Size 555ARJ (hollow low speed shaft with shrink disc) the hp rating and torque rating are limited by the shrink disc, see Page 33 for instructions.

| High Speed Shaft rpm | AVAILABILITY OF TYPES A / AR / AXV DOUBLE AND TRIPLE REDUCTION TYPE | 305 | 325 | 345 | 365 | 385 | 405 | 425 | 445 | 465 | 485 | 505 | 525 | 535 | 545 | 555 | 565 | 585 |
|---|---|---|---|---|---|---|---|---|---|---|---|---|---|---|---|---|---|---|
| All | A | X | X | X | X | X | X | X | X | X | X | X | X | . . . | X | . . . | X | X |
| | AR | . . . | . . . | . . . | . . . | . . . | X | X | X | X | X | X | . . . | X | . . . | X | . . . | . . . |
| | AXV | . . . | . . . | . . . | . . . | . . . | X | X | X | X | X | X | . . . | X | . . . | X | . . . | . . . |

© Rexnord Industries,LLC, 1998, 2009.

# Type A, AR & AXV Parallel Shaft
# Horsepower Ratings/Double Reduction

| High Speed Shaft rpm | Nominal Ratios ±4% | Approx. Low Speed Shaft rpm | DRIVE SIZE 305 | 325 | 345 | 365 | 385 | 405 | 425 | 445 | 465 | 485 | 505 | 525 | 535 | 545 | 555 | 565 | 585 |
|---|---|---|---|---|---|---|---|---|---|---|---|---|---|---|---|---|---|---|---|
| 870 | 5.60 | 155 | . . . | . . . | . . . | . . . | 317 | 564 | 745 | 1023 | 1504 | 2261 | 3115 | 4277 | 4442 | 5524 | 5651 | 6758 | 9020 |
| | 6.20 | 140 | 79.1 | 137 | 211 | 310 | 310 | 552 | 716 | 917 | 1424 | 2166 | 2922 | 4093 | 4270 | 5021 | 5486 | 6214 | 8726 |
| | 6.86 | 130 | 79.1 | 137 | 211 | 279 | 295 | 529 | 687 | 884 | 1336 | 2062 | 3068 | 3701 | 3920 | 4824 | 4857 | 5861 | 8916 |
| | 7.59 | 115 | 79.1 | 131 | 202 | 263 | 279 | 468 | 604 | 837 | 1205 | 1885 | 2599 | 3542 | 3695 | 4379 | 4761 | 5441 | 7338 |
| | 8.40 | 105 | 79.1 | 122 | 179 | 247 | 255 | 447 | 580 | 795 | 1130 | 1794 | 2689 | 3119 | 3302 | 4292 | 4173 | 5073 | 7560 |
| | 9.30 | 95 | 68.4 | 99.4 | 157 | 219 | 240 | 388 | 502 | 751 | 1067 | 1609 | 2391 | 2947 | 3289 | 3788 | 4112 | 4897 | 7341 |
| | 10.29 | 85 | 60.8 | 91.1 | 140 | 195 | 212 | 342 | 480 | 674 | 1001 | 1532 | 2303 | 2594 | 3119 | 3712 | 3857 | 4569 | 6683 |
| | 11.39 | 77 | 59.3 | 77.2 | 112 | 175 | 199 | 326 | 445 | 637 | 878 | 1438 | 2045 | 2668 | 2947 | 3294 | 3583 | 4157 | 6325 |
| | 12.61 | 70 | 56.0 | 77.2 | 112 | 175 | 191 | 288 | 397 | 608 | 861 | 1368 | 1954 | 2545 | 2594 | 3227 | 3353 | 3926 | 5909 |
| | 13.95 | 62 | 46.3 | 77.2 | 109 | 168 | 160 | 266 | 367 | 574 | 758 | 1211 | 1664 | 2182 | 2545 | 2812 | 3182 † | 3691 | 4996 |
| | 15.44 | 55 | 46.9 | 68.5 | 96.6 | 146 | 153 | 229 | 295 | 513 | 727 | 1121 | 1710 | 2108 | 2108 | 2671 | 2918 † | 3418 | 4797 |
| | 17.09 | 50 | 38.1 | 55.6 | 84.7 | 140 | 139 | 212 | 315 | 479 | 641 | 970 | 1466 | 1723 | 2108 | 2450 | 2743 † | 3056 | 4560 |
| | 18.91 | 45 | 36.1 | 54.7 | 80.2 | 104 | 133 | 186 | 288 | 441 | 598 | 896 | 1220 | 1524 | 1711 | 2265 | 2593 † | 2802 | 4219 |
| | 20.93 | 42 | 30.1 | 44.4 | 70.3 | 104 | 106 | 163 | 230 | 321 | 541 | 760 | 1123 | 1372 | 1551 | 2074 | 2197 † | 2204 | 3390 |
| | 23.16 | 38 | 28.6 | 44.6 | 67.6 | 96.0 | . . . | Consult Factory | | | | | | | | | | | |
| | 25.63 | 34 | 25.6 | 36.4 | 59.8 | 82.3 | . . . | | | | | | | | | | | | |
| | 28.36 | 31 | 22.7 | 33.3 | 53.2 | 79.4 | | | | | | | | | | | | | |
| | 31.39 | 28 | 18.8 | 30.9 | 48.3 | 68.1 | | | | | | | | | | | | | |
| | 34.74 | 25 | 18.2 | 28.3 | 44.3 | 60.5 | | | | | | | | | | | | | |
| 720 | 5.60 | 130 | . . . | . . . | . . . | . . . | 263 | 473 | 619 | 896 | 1317 | 1981 | 2728 | 3747 | 3891 | 4839 | 4950 | 5919 | 7465 |
| | 6.20 | 115 | 65.4 | 113 | 175 | 261 | 257 | 457 | 592 | 804 | 1248 | 1897 | 2559 | 3585 | 3741 | 4398 | 4806 | 5443 | 7465 |
| | 6.86 | 105 | 65.4 | 113 | 175 | 244 | 244 | 438 | 569 | 775 | 1170 | 1806 | 2688 | 3242 | 3434 | 4225 | 4255 | 5134 | 7465 |
| | 7.59 | 95 | 65.4 | 109 | 168 | 230 | 231 | 390 | 500 | 733 | 1055 | 1651 | 2277 | 3102 | 3237 | 3836 | 4171 | 4766 | 6428 |
| | 8.40 | 85 | 65.4 | 102 | 149 | 212 | 211 | 370 | 480 | 696 | 990 | 1571 | 2356 | 2732 | 2892 | 3760 | 3655 | 4443 | 6622 |
| | 9.30 | 77 | 56.8 | 82.6 | 131 | 182 | 199 | 322 | 415 | 658 | 934 | 1410 | 2094 | 2582 | 2881 | 3318 | 3602 | 4289 | 6431 |
| | 10.29 | 70 | 50.5 | 75.6 | 117 | 162 | 175 | 284 | 398 | 590 | 876 | 1342 | 1974 | 2272 | 2732 | 3252 | 3379 | 4003 | 5541 |
| | 11.39 | 62 | 49.1 | 63.9 | 93.6 | 145 | 165 | 271 | 369 | 558 | 769 | 1239 | 1753 | 2227 | 2582 | 2845 | 3138 † | 3585 | 5274 |
| | 12.61 | 55 | 46.3 | 63.9 | 93.6 | 145 | 158 | 241 | 329 | 532 | 754 | 1175 | 1617 | 2229 | 2272 | 2706 | 2937 † | 3429 | 4890 |
| | 13.95 | 50 | 38.4 | 63.9 | 90.6 | 139 | 133 | 221 | 304 | 498 | 664 | 1011 | 1398 | 1818 | 2230 | 2327 | 2787 † | 3157 | 4376 |
| | 15.44 | 45 | 38.9 | 56.8 | 80.1 | 121 | 127 | 191 | 244 | 429 | 616 | 933 | 1423 | 1811 | 1847 | 2211 | 2556 † | 2944 | 3970 |
| | 17.09 | 42 | 31.6 | 46.1 | 70.3 | 116 | 115 | 176 | 260 | 398 | 561 | 807 | 1220 | 1433 | 1780 | 2028 | 2389 † | 2549 | 3774 |
| | 18.91 | 38 | 30.1 | 45.3 | 66.5 | 86.8 | 110 | 155 | 238 | 365 | 497 | 744 | 1014 | 1267 | 1424 | 1875 | 2202 † | 2336 | 3491 |
| | 20.93 | 34 | 24.9 | 36.8 | 58.3 | 86.8 | 87.9 | 135 | 191 | 267 | 449 | 631 | 933 | 1141 | 1290 | 1717 | 1831 † | 1837 | 2827 |
| | 23.16 | 31 | 23.8 | 37.1 | 56.2 | 79.6 | . . . | Consult Factory | | | | | | | | | | | |
| | 25.63 | 28 | 21.2 | 30.2 | 49.6 | 68.3 | . . . | | | | | | | | | | | | |
| | 28.36 | 25 | 18.8 | 27.6 | 44.1 | 65.8 | | | | | | | | | | | | | |
| | 31.39 | 22 | 15.6 | 25.6 | 40.2 | 56.4 | | | | | | | | | | | | | |
| | 34.74 | 21 | 15.1 | 23.4 | 36.7 | 50.1 | | | | | | | | | | | | | |
| 580 | 5.60 | 105 | . . . | . . . | . . . | . . . | 211 | 381 | 499 | 770 | 1132 | 1702 | 2345 | 3220 | 3345 | 4159 | 4255 | 5088 | 6013 |
| | 6.20 | 95 | 52.7 | 91.1 | 141 | 210 | 207 | 368 | 477 | 691 | 1072 | 1631 | 2200 | 3082 | 3215 | 3781 | 4131 | 4679 | 6013 |
| | 6.86 | 85 | 52.7 | 91.1 | 141 | 206 | 197 | 353 | 458 | 666 | 1006 | 1553 | 2310 | 2786 | 2952 | 3494 | 3657 | 4413 | 6013 |
| | 7.59 | 77 | 52.7 | 88.2 | 136 | 197 | 186 | 316 | 403 | 630 | 907 | 1419 | 1957 | 2667 | 2782 | 3297 | 3585 | 4097 | 5525 |
| | 8.40 | 70 | 52.7 | 82.2 | 121 | 172 | 170 | 298 | 386 | 598 | 851 | 1350 | 1959 | 2348 | 2486 | 3200 | 3020 | 3819 | 5449 |
| | 9.30 | 62 | 45.9 | 66.8 | 106 | 148 | 160 | 261 | 334 | 566 | 803 | 1180 | 1787 | 2219 | 2476 | 2760 | 3020 | 3602 | 5192 |
| | 10.29 | 55 | 40.8 | 61.1 | 94.3 | 131 | 141 | 230 | 320 | 507 | 753 | 1119 | 1590 | 1953 | 2348 | 2628 | 2904 † | 3440 | 4463 |
| | 11.39 | 50 | 39.5 | 51.5 | 75.9 | 117 | 133 | 219 | 297 | 469 | 661 | 1004 | 1421 | 1808 | 2219 | 2292 | 2697 † | 2888 | 4248 |
| | 12.61 | 45 | 37.3 | 51.5 | 75.9 | 117 | 127 | 196 | 265 | 450 | 647 | 952 | 1303 | 1862 | 1953 | 2180 | 2525 † | 2762 | 3939 |
| | 13.95 | 42 | 31.0 | 51.5 | 73.2 | 112 | 107 | 178 | 245 | 402 | 566 | 819 | 1143 | 1474 | 1830 | 1874 | 2385 † | 2558 | 3661 |
| | 15.44 | 38 | 31.3 | 45.9 | 64.7 | 97.5 | 102 | 155 | 196 | 349 | 501 | 755 | 1153 | 1467 | 1583 | 1781 | 2197 † | 2391 | 3198 |
| | 17.09 | 34 | 25.5 | 37.2 | 56.7 | 93.9 | 92.4 | 142 | 210 | 322 | 455 | 652 | 987 | 1160 | 1442 | 1633 | 1940 † | 2070 | 3040 |
| | 18.91 | 31 | 24.3 | 36.6 | 53.7 | 70.4 | 88.4 | 125 | 192 | 294 | 402 | 602 | 819 | 1025 | 1153 | 1510 | 1788 † | 1897 | 2812 |
| | 20.93 | 28 | 20.1 | 29.7 | 47.0 | 70.4 | 70.8 | 109 | 154 | 215 | 363 | 510 | 753 | 923 | 1044 | 1383 | 1486 † | 1491 | 2295 |
| | 23.16 | 25 | 19.2 | 30.0 | 45.5 | 64.2 | . . . | Consult Factory | | | | | | | | | | | |
| | 25.63 | 22 | 17.1 | 24.3 | 40.0 | 55.1 | . . . | | | | | | | | | | | | |
| | 28.36 | 21 | 15.2 | 22.3 | 35.6 | 53.1 | | | | | | | | | | | | | |
| | 31.39 | 18 | 12.6 | 20.6 | 32.5 | 45.5 | | | | | | | | | | | | | |
| | 34.74 | 17 | 12.2 | 18.9 | 29.6 | 40.4 | | | | | | | | | | | | | |

† For Size 555ARJ (hollow low speed shaft with shrink disc) the hp rating and torque rating are limited by the shrink disc, see Page 33 for instructions.

| High Speed Shaft rpm | AVAILABILITY OF TYPES A / AR / AXV DOUBLE AND TRIPLE REDUCTION TYPE | 305 | 325 | 345 | 365 | 385 | 405 | 425 | 445 | 465 | 485 | 505 | 525 | 535 | 545 | 555 | 565 | 585 |
|---|---|---|---|---|---|---|---|---|---|---|---|---|---|---|---|---|---|---|
| All | A | X | X | X | X | X | X | X | X | X | X | X | X | . . . | X | . . . | X | X |
| | AR | . . . | . . . | . . . | . . . | . . . | X | X | X | X | X | X | . . . | X | . . . | X | . . . | . . . |
| | AXV | . . . | . . . | . . . | . . . | . . . | X | X | X | X | X | X | . . . | X | . . . | X | . . . | . . . |


© Rexnord Industries, LLC, 1998, 2009.

# Type A, AR & AXV Parallel Shaft
# Torque Ratings/Double Reduction

(POUND-INCHES AT LOW SPEED SHAFT. . .MULTIPLY VALUES LISTED BY 1000)

| High Speed Shaft rpm | Nominal Ratios ±4% | Approx. Low Speed Shaft rpm | DRIVE SIZE 305 | 325 | 345 | 365 | 385 | 405 | 425 | 445 | 465 | 485 | 505 | 525 | 535 | 545 | 555 | 565 | 585 |
|---|---|---|---|---|---|---|---|---|---|---|---|---|---|---|---|---|---|---|---|
| 870 | 5.60 | 155 | . . . | . . . | . . . | . . . | 135 | 228 | 302 | 418 | 600 | 897 | 1285 | 1672 | 1833 | 2217 | 2309 | 2736 | 3776 |
| | 6.20 | 140 | 35.4 | 62.9 | 96.0 | 138 | 139 | 242 | 322 | 434 | 615 | 971 | 1319 | 1734 | 1899 | 2193 | 2426 | 2883 | 3975 |
| | 6.86 | 130 | 38.7 | 67.9 | 104 | 144 | 147 | 257 | 338 | 452 | 639 | 994 | 1490 | 1791 | 2002 | 2394 | 2454 | 2949 | 4426 |
| | 7.59 | 115 | 42.5 | 71.6 | 112 | 148 | 157 | 257 | 330 | 465 | 663 | 1041 | 1426 | 1857 | 2033 | 2366 | 2604 | 3136 | 4130 |
| | 8.40 | 105 | 47.2 | 74.3 | 110 | 154 | 151 | 264 | 346 | 477 | 688 | 1066 | 1587 | 1970 | 2032 | 2534 | 2617 | 3176 | 4637 |
| | 9.30 | 95 | 45.7 | 69.5 | 108 | 150 | 160 | 258 | 338 | 489 | 700 | 1115 | 1640 | 2062 | 2181 | 2540 | 2792 | 3298 | 4936 |
| | 10.29 | 85 | 44.8 | 70.0 | 105 | 146 | 154 | 247 | 353 | 515 | 726 | 1142 | 1722 | 2022 | 2236 | 2720 | 2896 | 3342 | 5081 |
| | 11.39 | 77 | 47.4 | 64.0 | 95.9 | 142 | 163 | 260 | 378 | 528 | 735 | 1176 | 1777 | 2107 | 2329 | 2695 | 2968 | 3548 | 5272 |
| | 12.61 | 70 | 49.7 | 69.1 | 104 | 164 | 169 | 250 | 360 | 542 | 743 | 1204 | 1811 | 2198 | 2294 | 2885 | 3072 | 3639 | 5154 |
| | 13.95 | 62 | 46.0 | 76.2 | 113 | 171 | 166 | 261 | 384 | 555 | 755 | 1228 | 1680 | 2126 | 2483 | 2851 | 3179 † | 3731 | 4997 |
| | 15.44 | 55 | 50.7 | 75.3 | 112 | 164 | 172 | 251 | 336 | 575 | 784 | 1237 | 1842 | 2325 | 2381 | 2959 | 3313 † | 3716 | 5230 |
| | 17.09 | 50 | 46.1 | 70.2 | 109 | 171 | 169 | 262 | 390 | 582 | 798 | 1239 | 1850 | 2144 | 2626 | 3038 | 3397 † | 3861 | 5450 |
| | 18.91 | 45 | 49.6 | 75.6 | 112 | 145 | 175 | 249 | 391 | 583 | 781 | 1246 | 1686 | 2152 | 2392 | 3057 | 3495 † | 3876 | 5461 |
| | 20.93 | 42 | 46.3 | 70.5 | 110 | 158 | 151 | 239 | 340 | 492 | 764 | 1156 | 1690 | 2098 | 2344 | 3061 | 3301 † | 3395 | 5277 |
| | 23.16 | 38 | 46.3 | 75.2 | 111 | 163 | . . . | Consult Factory | | | | | | | | | | | |
| | 25.63 | 34 | 46.3 | 70.5 | 110 | 153 | . . . | | | | | | | | | | | | |
| | 28.36 | 31 | 45.4 | 70.9 | 107 | 163 | | | | | | | | | | | | | |
| | 31.39 | 28 | 42.5 | 70.6 | 107 | 154 | | | | | | | | | | | | | |
| | 34.74 | 25 | 45.4 | 71.1 | 107 | 149 | | | | | | | | | | | | | |
| 720 | 5.60 | 130 | . . . | . . . | . . . | . . . | 135 | 231 | 303 | 443 | 634 | 950 | 1360 | 1770 | 1941 | 2346 | 2443 | 2896 | 3776 |
| | 6.20 | 115 | 35.4 | 62.6 | 96.2 | 141 | 139 | 242 | 322 | 460 | 651 | 1027 | 1396 | 1835 | 2010 | 2321 | 2568 | 3051 | 4109 |
| | 6.86 | 105 | 38.6 | 67.7 | 104 | 152 | 147 | 257 | 338 | 479 | 676 | 1052 | 1577 | 1895 | 2119 | 2534 | 2598 | 3121 | 4478 |
| | 7.59 | 95 | 42.4 | 72.0 | 112 | 156 | 157 | 258 | 330 | 492 | 702 | 1102 | 1510 | 1965 | 2152 | 2504 | 2757 | 3320 | 4371 |
| | 8.40 | 85 | 47.2 | 75.1 | 111 | 160 | 151 | 264 | 346 | 505 | 729 | 1128 | 1680 | 2085 | 2151 | 2682 | 2770 | 3361 | 4908 |
| | 9.30 | 77 | 45.8 | 69.8 | 109 | 151 | 160 | 259 | 338 | 518 | 740 | 1181 | 1736 | 2183 | 2309 | 2688 | 2955 | 3491 | 5225 |
| | 10.29 | 70 | 45.0 | 70.2 | 106 | 147 | 154 | 247 | 354 | 544 | 768 | 1209 | 1783 | 2140 | 2366 | 2879 | 3066 | 3538 | 5091 |
| | 11.39 | 62 | 47.4 | 64.0 | 96.9 | 142 | 163 | 261 | 378 | 558 | 778 | 1225 | 1841 | 2125 | 2466 | 2812 | 3140 † | 3697 | 5312 |
| | 12.61 | 55 | 49.7 | 69.1 | 105 | 164 | 169 | 253 | 360 | 574 | 786 | 1250 | 1811 | 2326 | 2428 | 2923 | 3251 † | 3840 | 5153 |
| | 13.95 | 50 | 46.1 | 76.2 | 114 | 171 | 167 | 262 | 384 | 582 | 799 | 1238 | 1706 | 2141 | 2628 | 2851 | 3365 † | 3856 | 5289 |
| | 15.44 | 45 | 50.8 | 75.5 | 112 | 164 | 172 | 253 | 335 | 581 | 803 | 1244 | 1852 | 2414 | 2521 | 2960 | 3507 † | 3867 | 5230 |
| | 17.09 | 42 | 46.2 | 70.3 | 110 | 171 | 168 | 263 | 389 | 584 | 844 | 1246 | 1860 | 2155 | 2680 | 3038 | 3575 † | 3892 | 5450 |
| | 18.91 | 38 | 50.0 | 75.7 | 112 | 146 | 174 | 251 | 390 | 583 | 784 | 1250 | 1693 | 2162 | 2405 | 3058 | 3586 † | 3905 | 5460 |
| | 20.93 | 34 | 46.3 | 70.6 | 110 | 160 | 152 | 239 | 341 | 495 | 766 | 1159 | 1696 | 2109 | 2356 | 3063 | 3324 † | 3419 | 5317 |
| | 23.16 | 31 | 46.5 | 75.6 | 112 | 163 | . . . | Consult Factory | | | | | | | | | | | |
| | 25.63 | 28 | 46.4 | 70.7 | 110 | 154 | . . . | | | | | | | | | | | | |
| | 28.36 | 25 | 45.4 | 71.0 | 107 | 163 | | | | | | | | | | | | | |
| | 31.39 | 22 | 42.6 | 70.7 | 107 | 154 | | | | | | | | | | | | | |
| | 34.74 | 21 | 45.5 | 71.0 | 107 | 149 | | | | | | | | | | | | | |
| 580 | 5.60 | 105 | . . . | . . . | . . . | . . . | 134 | 231 | 303 | 472 | 677 | 1013 | 1451 | 1889 | 2071 | 2503 | 2607 | 3090 | 3776 |
| | 6.20 | 95 | 35.4 | 62.7 | 96.3 | 140 | 139 | 242 | 322 | 490 | 694 | 1096 | 1490 | 1958 | 2145 | 2477 | 2740 | 3256 | 4108 |
| | 6.86 | 85 | 38.7 | 67.8 | 104 | 159 | 148 | 257 | 338 | 511 | 721 | 1123 | 1682 | 2022 | 2262 | 2601 | 2772 | 3330 | 4478 |
| | 7.59 | 77 | 42.4 | 72.4 | 113 | 166 | 157 | 260 | 330 | 525 | 749 | 1175 | 1611 | 2097 | 2296 | 2672 | 2941 | 3543 | 4664 |
| | 8.40 | 70 | 47.2 | 75.1 | 112 | 161 | 151 | 264 | 346 | 538 | 778 | 1203 | 1735 | 2225 | 2295 | 2834 | 2841 | 3586 | 5014 |
| | 9.30 | 62 | 46.0 | 70.1 | 109 | 152 | 160 | 261 | 337 | 553 | 790 | 1226 | 1839 | 2329 | 2463 | 2776 | 3075 | 3639 | 5237 |
| | 10.29 | 55 | 45.1 | 70.4 | 106 | 147 | 154 | 249 | 353 | 581 | 820 | 1252 | 1783 | 2284 | 2524 | 2889 | 3271 † | 3775 | 5090 |
| | 11.39 | 50 | 47.3 | 64.0 | 97.5 | 142 | 163 | 261 | 378 | 583 | 830 | 1232 | 1852 | 2142 | 2631 | 2812 | 3351 † | 3697 | 5311 |
| | 12.61 | 45 | 49.7 | 69.2 | 105 | 164 | 169 | 255 | 360 | 602 | 837 | 1257 | 1811 | 2412 | 2591 | 2923 | 3470 † | 3840 | 5153 |
| | 13.95 | 42 | 46.2 | 76.3 | 114 | 171 | 167 | 262 | 384 | 583 | 845 | 1245 | 1731 | 2155 | 2678 | 2850 | 3574 † | 3879 | 5493 |
| | 15.44 | 38 | 50.8 | 75.7 | 112 | 164 | 172 | 255 | 335 | 586 | 811 | 1250 | 1863 | 2427 | 2683 | 2960 | 3742 † | 3899 | 5230 |
| | 17.09 | 34 | 46.3 | 70.5 | 110 | 172 | 168 | 263 | 390 | 587 | 849 | 1249 | 1868 | 2166 | 2695 | 3037 | 3603 † | 3923 | 5450 |
| | 18.91 | 31 | 50.1 | 75.9 | 113 | 147 | 174 | 251 | 391 | 583 | 787 | 1255 | 1698 | 2171 | 2417 | 3057 | 3615 † | 3937 | 5460 |
| | 20.93 | 28 | 46.4 | 70.7 | 110 | 161 | 152 | 239 | 341 | 495 | 769 | 1163 | 1700 | 2117 | 2367 | 3062 | 3349 † | 3445 | 5359 |
| | 23.16 | 25 | 46.6 | 75.9 | 112 | 163 | . . . | Consult Factory | | | | | | | | | | | |
| | 25.63 | 22 | 46.4 | 70.6 | 110 | 154 | . . . | | | | | | | | | | | | |
| | 28.36 | 21 | 45.6 | 71.2 | 107 | 164 | | | | | | | | | | | | | |
| | 31.39 | 18 | 42.7 | 70.6 | 108 | 154 | | | | | | | | | | | | | |
| | 34.74 | 17 | 45.7 | 71.2 | 107 | 149 | | | | | | | | | | | | | |

† For Size 555ARJ (hollow low speed shaft with shrink disc) the hp rating and torque rating are limited by the shrink disc, see Page 33 for instructions.

| High Speed Shaft rpm | AVAILABILITY OF TYPES A / AR / AXV DOUBLE AND TRIPLE REDUCTION TYPE | 305 | 325 | 345 | 365 | 385 | 405 | 425 | 445 | 465 | 485 | 505 | 525 | 535 | 545 | 555 | 565 | 585 |
|---|---|---|---|---|---|---|---|---|---|---|---|---|---|---|---|---|---|---|
| All | A | X | X | X | X | X | X | X | X | X | X | X | X | . . . | X | . . . | X | X |
| | AR | . . . | . . . | . . . | . . . | . . . | X | X | X | X | X | X | . . . | X | . . . | X | . . . | . . . |
| | AXV | . . . | . . . | . . . | . . . | . . . | X | X | X | X | X | X | . . . | X | . . . | X | . . . | . . . |

© Rexnord Industries,LLC, 1998, 2009.

# Type A, AR & AXV Parallel Shaft
# Horsepower Ratings/Triple Reduction

| High Speed Shaft rpm | Nominal Ratios ±4% | Approx. Low Speed Shaft rpm | DRIVE SIZE ★ | | | | | | | | | | | | | | | | |
|---|---|---|---|---|---|---|---|---|---|---|---|---|---|---|---|---|---|---|---|
| | | | 305 | 325 | 345 | 365 | 385 | 405 | 425 | 445 | 465 | 485 | 505 | 525 | 535 | 545 | 555 | 565 | 585 |
| 1750 | 23.16 | 75.0 | . . . | . . . | . . . | . . . | 192 | 281 | 397 | 639 | 908 | 1226 | 1760 | 2567 | 2881 | 3112 | 3212 | 4119 | 5159 |
| | 25.63 | 68.0 | . . . | . . . | . . . | . . . | 181 | 296 | 354 | 606 | 800 | 1226 | 1553 | 2440 | 2567 | 3084 | 3212 | 3870 | 4538 |
| | 28.36 | 60.0 | . . . | . . . | . . . | . . . | 158 | 255 | 354 | 559 | 793 | 1196 | 1760 | 2306 | 2490 | 2832 | 3112 † | 3656 | 4073 |
| | 31.39 | 56.0 | . . . | . . . | . . . | . . . | 145 | 234 | 332 | 529 | 698 | 1108 | 1464 | 2124 | 2191 | 2470 | 2843 † | 3246 | 4073 |
| | 34.74 | 50.0 | . . . | . . . | . . . | . . . | 127 | 202 | 292 | 494 | 685 | 1023 | 1505 | 1986 | 2124 | 2232 | 2660 † | 3105 | 3720 |
| | 38.44 | 45.0 | 31.2 | 49.8 | 66.4 | 95.6 | 120 | 186 | 270 | 427 | 603 | 877 | 1254 | 1684 | 1952 | 1993 | 2465 † | 2631 | 3515 |
| | 42.54 | 40.0 | 29.4 | 49.9 | 66.4 | 95.6 | 115 | 171 | 216 | 408 | 569 | 809 | 1209 | 1565 | 1684 | 1895 | 2289 † | 2376 | 3515 |
| | 47.08 | 37.0 | 27.6 | 40.9 | 54.1 | 95.6 | 94.3 | 155 | 231 | 358 | 498 | 753 | 1072 | 1442 | 1442 | 1701 | 2149 † | 2222 | 2970 |
| | 52.11 | 34.0 | 23.6 | 34.4 | 54.1 | 88.8 | 90.2 | 142 | 213 | 317 | 442 | 695 | 1000 | 1331 | 1442 | 1617 | 2049 † | 1970 | 2800 |
| | 57.66 | 30.0 | 22.9 | 34.7 | 52.0 | 76.2 | 81.5 | 129 | 182 | 292 | 400 | 600 | 917 | 1158 | 1308 | 1391 | 1790 † | 1825 | 2570 |
| | 63.82 | 27.0 | 19.5 | 32.4 | 49.2 | 67.7 | 77.2 | 118 | 146 | 266 | 353 | 553 | 844 | 1060 | 1088 | 1321 | 1705 † | 1705 | 2423 |
| | 70.62 | 25.0 | 18.0 | 25.5 | 43.1 | 61.4 | 66.7 | 90.9 | 156 | 232 | 320 | 479 | 736 | 838 | 1028 | 1176 | 1454 † | 1503 | 2168 |
| | 78.16 | 22.0 | 15.9 | 24.3 | 38.8 | 54.1 | 62.5 | 91.9 | 143 | 211 | 270 | 442 | 677 | 800 | 995 | 1100 | 1331 † | 1413 | 1911 |
| | 86.50 | 20.0 | 14.7 | 18.2 | 34.0 | 50.5 | 53.6 | 80.3 | 120 | 196 | 244 | 407 | 559 | 706 | 878 | 960 | 1161 † | 1306 | 1768 |
| | 95.73 | 18.0 | 13.6 | 18.2 | 33.0 | 40.4 | 43.2 | 68.6 | 100 | 167 | 220 | 376 | 513 | 623 | 701 | 759 | 1069 † | 1038 | 1597 |
| | 105.9 | 16.5 | 12.5 | 17.8 | 28.9 | 39.8 | . . . | 63.1 | 91.4 | 132 | 204 | 319 | 472 | 560 | 669 | 698 | 888 † | 951 | 1464 |
| | 117.2 | 15.0 | 11.1 | 16.3 | 25.7 | 35.3 | | | | | | | | | | | | | |
| | 129.7 | 13.5 | 9.24 | 15.1 | 23.5 | 32.9 | | | | | | | | | | | | | |
| | 143.6 | 12.0 | 8.91 | 13.8 | 21.4 | 29.2 | | | | | | | | | | | | | |
| | 158.9 | 11.0 | 8.01 | 8.48 | 19.7 | 26.5 | | | | | | | | | | | | | |
| | 175.9 | 10.0 | 7.47 | 8.48 | 17.5 | 23.5 | | | | | | | | | | | | | |
| | 194.6 | 9.0 | 6.41 | 8.48 | 16.1 | 20.5 | | | | | | | | | | | | | |
| | 215.4 | 8.1 | 5.99 | 8.48 | 14.6 | 19.9 | | | | | | | | | | | | | |
| 1430 | 23.16 | 60.0 | . . . | . . . | . . . | . . . | 157 | 232 | 345 | 555 | 789 | 1064 | 1528 | 2228 | 2502 | 2666 | 2788 | 3435 | 4479 |
| | 25.63 | 56.0 | . . . | . . . | . . . | . . . | 148 | 243 | 306 | 526 | 694 | 1064 | 1349 | 2088 | 2228 | 2557 | 2788 | 3197 | 3940 |
| | 28.36 | 50.0 | . . . | . . . | . . . | . . . | 129 | 210 | 293 | 486 | 688 | 983 | 1524 | 1965 | 2162 | 2314 | 2702 † | 3058 | 3537 |
| | 31.39 | 45.0 | . . . | . . . | . . . | . . . | 119 | 192 | 271 | 438 | 606 | 911 | 1250 | 1770 | 1842 | 2018 | 2468 † | 2653 | 3537 |
| | 34.74 | 40.0 | . . . | . . . | . . . | . . . | 104 | 166 | 238 | 411 | 573 | 840 | 1237 | 1632 | 1765 | 1824 | 2309 † | 2537 | 3230 |
| | 38.44 | 37.0 | 25.8 | 40.8 | 55.1 | 79.3 | 97.7 | 152 | 221 | 350 | 502 | 719 | 1024 | 1394 | 1604 | 1628 | 2140 † | 2150 | 3051 |
| | 42.54 | 34.0 | 24.0 | 41.0 | 55.1 | 79.3 | 93.6 | 140 | 177 | 335 | 467 | 664 | 988 | 1285 | 1394 | 1548 | 1987 † | 1942 | 2933 |
| | 47.08 | 30.0 | 22.6 | 33.5 | 44.8 | 79.3 | 77.0 | 127 | 189 | 294 | 409 | 617 | 879 | 1191 | 1191 | 1390 | 1866 † | 1816 | 2579 |
| | 52.11 | 27.0 | 19.5 | 28.4 | 44.8 | 72.7 | 73.7 | 117 | 174 | 260 | 364 | 569 | 820 | 1091 | 1191 | 1321 | 1726 † | 1610 | 2408 |
| | 57.66 | 25.0 | 18.7 | 28.4 | 42.6 | 62.4 | 66.6 | 105 | 149 | 239 | 328 | 492 | 752 | 949 | 1073 | 1136 | 1472 † | 1491 | 2134 |
| | 63.82 | 22.0 | 15.9 | 26.6 | 40.3 | 55.4 | 63.1 | 96.7 | 119 | 218 | 289 | 453 | 691 | 869 | 945 | 1080 | 1398 † | 1394 | 1980 |
| | 70.62 | 20.0 | 14.7 | 21.1 | 35.3 | 50.2 | 54.5 | 74.3 | 127 | 190 | 277 | 393 | 603 | 687 | 854 | 961 | 1196 † | 1228 | 1772 |
| | 78.16 | 18.0 | 13.0 | 19.9 | 31.7 | 44.8 | 51.2 | 75.2 | 117 | 173 | 221 | 362 | 555 | 655 | 815 | 899 | 1094 † | 1155 | 1561 |
| | 86.50 | 16.5 | 12.0 | 15.0 | 27.8 | 41.3 | 43.9 | 65.7 | 98.5 | 160 | 199 | 333 | 457 | 578 | 719 | 784 | 954 † | 1067 | 1445 |
| | 95.73 | 15.0 | 11.1 | 15.0 | 27.0 | 33.3 | 35.3 | 56.1 | 81.7 | 136 | 180 | 308 | 419 | 510 | 574 | 621 | 878 † | 853 | 1313 |
| | 105.9 | 13.5 | 10.2 | 14.6 | 23.6 | 32.5 | . . . | 51.6 | 74.7 | 108 | 167 | 261 | 386 | 459 | 548 | 571 | 729 † | 781 | 1203 |
| | 117.2 | 12.0 | 9.09 | 13.3 | 21.0 | 28.9 | | | | | | | | | | | | | |
| | 129.7 | 11.0 | 7.56 | 12.4 | 19.3 | 26.9 | | | | | | | | | | | | | |
| | 143.6 | 10.0 | 7.28 | 11.3 | 17.5 | 23.9 | | | | | | | | | | | | | |
| | 158.9 | 9.0 | 6.54 | 6.97 | 16.1 | 21.7 | | | | | | | | | | | | | |
| | 175.9 | 8.1 | 6.11 | 6.97 | 14.3 | 19.2 | | | | | | | | | | | | | |
| | 194.6 | 7.5 | 5.24 | 6.97 | 13.2 | 16.9 | | | | | | | | | | | | | |
| | 215.4 | 6.6 | 4.89 | 6.97 | 11.9 | 16.3 | | | | | | | | | | | | | |
| 1170 | 23.16 | 50.0 | . . . | . . . | . . . | . . . | 128 | 193 | 284 | 482 | 685 | 925 | 1328 | 1868 | 2174 | 2181 | 2423 | 2811 | 3892 |
| | 25.63 | 45.0 | . . . | . . . | . . . | . . . | 121 | 199 | 251 | 435 | 603 | 876 | 1172 | 1737 | 1868 | 2092 | 2423 † | 2616 | 3423 |
| | 28.36 | 40.0 | . . . | . . . | . . . | . . . | 106 | 173 | 240 | 402 | 578 | 808 | 1254 | 1617 | 1813 | 1893 | 2348 † | 2502 | 3073 |
| | 31.39 | 37.0 | . . . | . . . | . . . | . . . | 97.2 | 157 | 222 | 359 | 506 | 748 | 1023 | 1448 | 1507 | 1651 | 2145 † | 2170 | 2961 |
| | 34.74 | 34.0 | . . . | . . . | . . . | . . . | 85.0 | 137 | 195 | 337 | 471 | 690 | 1016 | 1341 | 1444 | 1492 | 2007 † | 2076 | 2806 |
| | 38.44 | 30.0 | 21.3 | 33.4 | 45.6 | 65.7 | 80.0 | 125 | 181 | 287 | 412 | 591 | 838 | 1152 | 1318 | 1332 | 1859 † | 1759 | 2652 |
| | 42.54 | 27.0 | 19.7 | 33.7 | 45.6 | 65.7 | 76.6 | 115 | 145 | 274 | 383 | 545 | 809 | 1055 | 1152 | 1267 | 1656 † | 1589 | 2399 |
| | 47.08 | 25.0 | 18.5 | 27.4 | 37.1 | 65.7 | 63.0 | 104 | 155 | 241 | 335 | 507 | 721 | 978 | 983 | 1137 | 1541 † | 1486 | 2182 |
| | 52.11 | 22.0 | 16.1 | 23.5 | 37.1 | 59.6 | 60.3 | 95.5 | 142 | 214 | 299 | 467 | 673 | 896 | 975 | 1081 | 1417 † | 1317 | 1970 |
| | 57.66 | 20.0 | 15.3 | 23.3 | 34.9 | 51.1 | 54.5 | 86.2 | 122 | 196 | 269 | 403 | 617 | 776 | 880 | 930 | 1212 † | 1220 | 1746 |
| | 63.82 | 18.0 | 13.0 | 21.8 | 33.0 | 45.4 | 51.6 | 79.2 | 97.6 | 178 | 237 | 372 | 567 | 713 | 774 | 883 | 1147 † | 1140 | 1620 |
| | 70.62 | 16.5 | 12.1 | 17.4 | 28.9 | 41.1 | 44.6 | 60.9 | 104 | 156 | 227 | 322 | 495 | 563 | 701 | 786 | 984 † | 1005 | 1449 |
| | 78.16 | 15.0 | 10.6 | 16.3 | 26.0 | 37.1 | 42.0 | 61.6 | 95.3 | 141 | 181 | 297 | 455 | 537 | 668 | 735 | 900 † | 945 | 1278 |
| | 86.50 | 13.5 | 9.86 | 12.4 | 22.8 | 33.8 | 36.0 | 53.8 | 80.9 | 131 | 163 | 273 | 374 | 474 | 589 | 642 | 784 † | 873 | 1182 |
| | 95.73 | 12.0 | 9.12 | 12.4 | 22.1 | 27.5 | 28.9 | 46.0 | 66.9 | 112 | 148 | 252 | 343 | 418 | 471 | 509 | 722 † | 702 | 1080 |
| | 105.9 | 11.0 | 8.38 | 11.9 | 19.3 | 26.6 | . . . | 42.2 | 61.1 | 88.6 | 137 | 214 | 315 | 376 | 449 | 468 | 600 † | 642 | 989 |
| | 117.2 | 10.0 | 7.44 | 10.9 | 17.2 | 23.7 | | | | | | | | | | | | | |
| | 129.7 | 9.0 | 6.20 | 10.1 | 15.8 | 22.0 | | | | | | | | | | | | | |
| | 143.6 | 8.1 | 5.96 | 9.25 | 14.3 | 19.5 | | | | | | | | | | | | | |
| | 158.9 | 7.5 | 5.36 | 5.73 | 13.2 | 17.7 | | | | | | | | | | | | | |
| | 175.9 | 6.6 | 5.00 | 5.73 | 11.7 | 15.7 | | | | | | | | | | | | | |
| | 194.6 | 6.0 | 4.29 | 5.73 | 10.8 | 13.9 | | | | | | | | | | | | | |
| | 215.4 | 5.4 | 4.01 | 5.73 | 9.74 | 13.3 | | | | | | | | | | | | | |

★ See Page 22 for availability of Type A, AR, AXV triple reduction.
† For Size 555ARJ (hollow low speed shaft with shrink disc) the hp rating and torque rating are limited by the shrink disc, see Page 33 for instructions.


© Rexnord Industries, LLC, 1998, 2009.

# Type A, AR & AXV Parallel Shaft
# Torque Ratings/Triple Reduction

(POUND-INCHES AT LOW SPEED SHAFT. . . MULTIPLY VALUES LISTED BY 1000)

| High Speed Shaft rpm | Nominal Ratios ±4% | Approx. Low Speed Shaft rpm | DRIVE SIZE ★ | | | | | | | | | | | | | | | | |
|---|---|---|---|---|---|---|---|---|---|---|---|---|---|---|---|---|---|---|---|
| | | | 305 | 325 | 345 | 365 | 385 | 405 | 425 | 445 | 465 | 485 | 505 | 525 | 535 | 545 | 555 | 565 | 585 |
| 1750 | 23.16 | 75.0 | . . . | . . . | . . . | . . . | 154 | 226 | 336 | 528 | 726 | 1010 | 1501 | 2066 | 2313 | 2570 | 2588 | 3397 | 4343 |
| | 25.63 | 68.0 | . . . | . . . | . . . | . . . | 163 | 260 | 325 | 543 | 738 | 1163 | 1467 | 2206 | 2350 | 2772 | 2863 | 3657 | 4224 |
| | 28.36 | 60.0 | . . . | . . . | . . . | . . . | 154 | 252 | 355 | 561 | 770 | 1235 | 1744 | 2309 | 2464 | 2889 | 3133 † | 3752 | 4349 |
| | 31.39 | 56.0 | . . . | . . . | . . . | . . . | 166 | 261 | 384 | 576 | 782 | 1234 | 1644 | 2324 | 2517 | 2813 | 3210 † | 3697 | 4740 |
| | 34.74 | 50.0 | . . . | . . . | . . . | . . . | 157 | 252 | 360 | 593 | 820 | 1241 | 1849 | 2407 | 2637 | 2789 | 3392 † | 3841 | 4525 |
| | 38.44 | 45.0 | 42.9 | 70.3 | 92.9 | 131 | 167 | 262 | 384 | 584 | 833 | 1243 | 1746 | 2354 | 2673 | 2813 | 3449 † | 3698 | 4632 |
| | 42.54 | 40.0 | 44.0 | 74.9 | 103 | 146 | 173 | 262 | 334 | 603 | 839 | 1248 | 1810 | 2423 | 2670 | 2923 | 3618 † | 3696 | 5048 |
| | 47.08 | 37.0 | 46.2 | 70.5 | 92.1 | 157 | 166 | 263 | 389 | 585 | 847 | 1247 | 1866 | 2379 | 2498 | 2813 | 3656 † | 3718 | 4999 |
| | 52.11 | 34.0 | 42.7 | 65.9 | 103 | 163 | 172 | 262 | 385 | 588 | 815 | 1253 | 1868 | 2433 | 2700 | 2922 | 3795 † | 3841 | 5220 |
| | 57.66 | 30.0 | 46.4 | 70.6 | 110 | 153 | 168 | 264 | 384 | 588 | 851 | 1252 | 1870 | 2407 | 2701 | 2851 | 3616 † | 3880 | 5407 |
| | 63.82 | 27.0 | 44.9 | 75.7 | 113 | 149 | 172 | 263 | 335 | 583 | 788 | 1256 | 1874 | 2441 | 2566 | 2959 | 3914 † | 3899 | 5397 |
| | 70.62 | 25.0 | 46.4 | 67.8 | 110 | 154 | 174 | 240 | 390 | 588 | 806 | 1255 | 1876 | 2178 | 2674 | 3003 | 3640 † | 3899 | 5450 |
| | 78.16 | 22.0 | 44.8 | 71.0 | 113 | 150 | 174 | 251 | 392 | 583 | 772 | 1260 | 1879 | 2181 | 2715 | 3023 | 3652 † | 3939 | 5450 |
| | 86.50 | 20.0 | 46.4 | 59.2 | 110 | 154 | 175 | 240 | 368 | 586 | 792 | 1263 | 1699 | 2184 | 2719 | 3038 | 3669 † | 3938 | 5461 |
| | 95.73 | 18.0 | 45.1 | 63.0 | 113 | 143 | 153 | 240 | 340 | 587 | 772 | 1262 | 1696 | 2187 | 2436 | 2688 | 3677 † | 3485 | 5424 |
| | 105.9 | 16.5 | 46.4 | 70.7 | 110 | 154 | . . . | 241 | 340 | 497 | 776 | 1171 | 1699 | 2129 | 2438 | 2690 | 3405 † | 3496 | 5438 |
| | 117.2 | 15.0 | 45.5 | 71.1 | 107 | 149 | | | | | | | | | | | | | |
| | 129.7 | 13.5 | 42.8 | 70.8 | 108 | 155 | | | | | | | | | | | | | |
| | 143.6 | 12.0 | 45.6 | 71.1 | 107 | 150 | | | | | | | | | | | | | |
| | 158.9 | 11.0 | 45.6 | 50.2 | 111 | 155 | | | | | | | | | | | | | |
| | 175.9 | 10.0 | 45.6 | 55.1 | 107 | 150 | | | | | | | | | | | | | |
| | 194.6 | 9.0 | 45.6 | 59.2 | 109 | 141 | | | | | | | | | | | | | |
| | 215.4 | 8.1 | 45.6 | 65.1 | 108 | 150 | | | | | | | | | | | | | |
| 1430 | 23.16 | 60.0 | . . . | . . . | . . . | . . . | 154 | 228 | 358 | 561 | 772 | 1073 | 1595 | 2195 | 2459 | 2695 | 2749 | 3467 | 4615 |
| | 25.63 | 56.0 | . . . | . . . | . . . | . . . | 163 | 261 | 344 | 577 | 783 | 1235 | 1559 | 2310 | 2496 | 2813 | 3041 | 3697 | 4488 |
| | 28.36 | 50.0 | . . . | . . . | . . . | . . . | 154 | 254 | 360 | 597 | 817 | 1242 | 1848 | 2408 | 2618 | 2888 | 3329 † | 3841 | 4622 |
| | 31.39 | 45.0 | . . . | . . . | . . . | . . . | 167 | 262 | 384 | 584 | 831 | 1242 | 1718 | 2370 | 2590 | 2812 | 3410 † | 3698 | 5038 |
| | 34.74 | 40.0 | . . . | . . . | . . . | . . . | 157 | 253 | 359 | 604 | 839 | 1247 | 1860 | 2421 | 2682 | 2789 | 3604 † | 3840 | 4808 |
| | 38.44 | 37.0 | 43.5 | 70.5 | 94.3 | 133 | 166 | 262 | 385 | 585 | 848 | 1247 | 1745 | 2384 | 2688 | 2812 | 3665 † | 3698 | 4920 |
| | 42.54 | 34.0 | 44.0 | 75.3 | 105 | 148 | 172 | 262 | 335 | 606 | 843 | 1254 | 1810 | 2435 | 2705 | 2922 | 3844 † | 3697 | 5155 |
| | 47.08 | 30.0 | 46.3 | 70.6 | 93.4 | 160 | 166 | 264 | 390 | 588 | 852 | 1250 | 1872 | 2405 | 2525 | 2813 | 3885 † | 3718 | 5312 |
| | 52.11 | 27.0 | 43.2 | 66.5 | 104 | 163 | 172 | 264 | 384 | 591 | 821 | 1255 | 1874 | 2440 | 2729 | 2922 | 3912 † | 3841 | 5494 |
| | 57.66 | 25.0 | 46.4 | 70.7 | 110 | 154 | 168 | 263 | 385 | 589 | 854 | 1256 | 1877 | 2414 | 2711 | 2849 | 3639 † | 3879 | 5494 |
| | 63.82 | 22.0 | 44.8 | 76.0 | 113 | 149 | 173 | 264 | 334 | 585 | 789 | 1259 | 1878 | 2449 | 2728 | 2960 | 3927 † | 3901 | 5397 |
| | 70.62 | 20.0 | 46.3 | 68.6 | 110 | 154 | 174 | 240 | 388 | 590 | 854 | 1260 | 1881 | 2185 | 2719 | 3003 | 3664 † | 3899 | 5451 |
| | 78.16 | 18.0 | 44.8 | 71.1 | 113 | 152 | 175 | 252 | 392 | 585 | 773 | 1263 | 1885 | 2185 | 2721 | 3023 | 3674 † | 3940 | 5448 |
| | 86.50 | 16.5 | 46.3 | 59.7 | 110 | 154 | 175 | 241 | 370 | 586 | 790 | 1265 | 1700 | 2188 | 2725 | 3036 | 3689 † | 3937 | 5462 |
| | 95.73 | 15.0 | 45.1 | 63.5 | 113 | 144 | 153 | 240 | 340 | 585 | 773 | 1265 | 1695 | 2191 | 2441 | 2691 | 3696 † | 3505 | 5457 |
| | 105.9 | 13.5 | 46.3 | 71.0 | 110 | 154 | . . . | 241 | 340 | 497 | 777 | 1173 | 1701 | 2135 | 2444 | 2693 | 3421 † | 3513 | 5468 |
| | 117.2 | 12.0 | 45.6 | 71.0 | 107 | 150 | | | | | | | | | | | | | |
| | 129.7 | 11.0 | 42.9 | 71.1 | 109 | 155 | | | | | | | | | | | | | |
| | 143.6 | 10.0 | 45.6 | 71.2 | 107 | 150 | | | | | | | | | | | | | |
| | 158.9 | 9.0 | 45.6 | 50.4 | 111 | 155 | | | | | | | | | | | | | |
| | 175.9 | 8.1 | 45.6 | 55.4 | 107 | 150 | | | | | | | | | | | | | |
| | 194.6 | 7.5 | 45.6 | 59.6 | 109 | 143 | | | | | | | | | | | | | |
| | 215.4 | 6.6 | 45.6 | 65.4 | 107 | 150 | | | | | | | | | | | | | |
| 1170 | 23.16 | 50.0 | . . . | . . . | . . . | . . . | 153 | 232 | 360 | 596 | 819 | 1140 | 1694 | 2249 | 2611 | 2694 | 2920 | 3468 | 4901 |
| | 25.63 | 45.0 | . . . | . . . | . . . | . . . | 163 | 261 | 345 | 583 | 832 | 1243 | 1656 | 2348 | 2558 | 2813 | 3230 † | 3698 | 4766 |
| | 28.36 | 40.0 | . . . | . . . | . . . | . . . | 154 | 256 | 360 | 604 | 839 | 1248 | 1859 | 2422 | 2683 | 2888 | 3536 † | 3841 | 4908 |
| | 31.39 | 37.0 | . . . | . . . | . . . | . . . | 166 | 262 | 384 | 585 | 848 | 1246 | 1719 | 2370 | 2589 | 2812 | 3622 † | 3696 | 5154 |
| | 34.74 | 34.0 | . . . | . . . | . . . | . . . | 157 | 256 | 360 | 605 | 843 | 1251 | 1867 | 2431 | 2682 | 2788 | 3828 † | 3841 | 5105 |
| | 38.44 | 30.0 | 43.8 | 70.5 | 95.4 | 135 | 166 | 263 | 385 | 587 | 851 | 1253 | 1745 | 2408 | 2699 | 2812 | 3891 † | 3698 | 5227 |
| | 42.54 | 27.0 | 44.1 | 75.6 | 106 | 150 | 173 | 264 | 336 | 606 | 845 | 1258 | 1812 | 2443 | 2732 | 2923 | 3915 † | 3697 | 5154 |
| | 47.08 | 25.0 | 46.4 | 70.6 | 94.5 | 162 | 166 | 264 | 391 | 589 | 853 | 1256 | 1877 | 2414 | 2547 | 2812 | 3921 † | 3719 | 5493 |
| | 52.11 | 22.0 | 43.6 | 67.3 | 105 | 163 | 172 | 264 | 383 | 594 | 824 | 1259 | 1880 | 2449 | 2730 | 2922 | 3926 † | 3840 | 5493 |
| | 57.66 | 20.0 | 46.4 | 70.9 | 110 | 154 | 168 | 264 | 385 | 590 | 856 | 1258 | 1882 | 2413 | 2718 | 2851 | 3662 † | 3880 | 5494 |
| | 63.82 | 18.0 | 44.8 | 76.2 | 113 | 149 | 172 | 264 | 335 | 584 | 791 | 1264 | 1883 | 2456 | 2731 | 2958 | 3938 † | 3899 | 5397 |
| | 70.62 | 16.5 | 46.6 | 69.2 | 110 | 154 | 174 | 240 | 389 | 592 | 855 | 1262 | 1887 | 2188 | 2728 | 3002 | 3685 † | 3900 | 5448 |
| | 78.16 | 15.0 | 44.7 | 71.2 | 113 | 154 | 175 | 252 | 390 | 583 | 774 | 1267 | 1889 | 2189 | 2726 | 3021 | 3694 † | 3940 | 5451 |
| | 86.50 | 13.5 | 46.5 | 60.4 | 111 | 154 | 176 | 241 | 371 | 586 | 791 | 1267 | 1700 | 2193 | 2728 | 3039 | 3706 † | 3937 | 5461 |
| | 95.73 | 12.0 | 45.3 | 64.2 | 113 | 145 | 153 | 241 | 340 | 589 | 777 | 1265 | 1696 | 2194 | 2448 | 2696 | 3714 † | 3525 | 5486 |
| | 105.9 | 11.0 | 46.5 | 70.7 | 110 | 154 | . . . | 241 | 340 | 499 | 779 | 1175 | 1696 | 2138 | 2447 | 2698 | 3441 † | 3530 | 5495 |
| | 117.2 | 10.0 | 45.6 | 71.1 | 107 | 150 | | | | | | | | | | | | | |
| | 129.7 | 9.0 | 43.0 | 70.8 | 109 | 155 | | | | | | | | | | | | | |
| | 143.6 | 8.1 | 45.6 | 71.3 | 107 | 150 | | | | | | | | | | | | | |
| | 158.9 | 7.5 | 45.7 | 50.7 | 111 | 154 | | | | | | | | | | | | | |
| | 175.9 | 6.6 | 45.6 | 55.7 | 107 | 150 | | | | | | | | | | | | | |
| | 194.6 | 6.0 | 45.6 | 59.8 | 109 | 143 | | | | | | | | | | | | | |
| | 215.4 | 5.4 | 45.7 | 65.8 | 107 | 150 | | | | | | | | | | | | | |

★ See Page 22 for availability of Type A, AR, AXV triple reduction.

† For Size 555ARJ (hollow low speed shaft with shrink disc) the hp rating and torque rating are limited by the shrink disc, see Page 33 for instructions.

© Rexnord Industries,LLC, 1998, 2009.

# Type A, AR & AXV Parallel Shaft
# Horsepower Ratings/Triple Reduction

| High Speed Shaft rpm | Nominal Ratios ±4% | Approx. Low Speed Shaft rpm | DRIVE SIZE ★ | | | | | | | | | | | | | | | | |
|---|---|---|---|---|---|---|---|---|---|---|---|---|---|---|---|---|---|---|---|
| | | | 305 | 325 | 345 | 365 | 385 | 405 | 425 | 445 | 465 | 485 | 505 | 525 | 535 | 545 | 555 | 565 | 585 |
| 870 | 23.16 | 38.0 | . . . | . . . | . . . | . . . | 95.5 | 147 | 211 | 364 | 523 | 713 | 1033 | 1389 | 1651 | 1622 | 1969 † | 2090 | 3006 |
| | 25.63 | 34.0 | . . . | . . . | . . . | . . . | 90.0 | 149 | 186 | 325 | 458 | 655 | 891 | 1316 | 1389 | 1555 | 1969 † | 1945 | 2782 |
| | 28.36 | 31.0 | . . . | . . . | . . . | . . . | 78.5 | 130 | 178 | 300 | 432 | 604 | 938 | 1210 | 1348 | 1408 | 1908 † | 1860 | 2498 |
| | 31.39 | 28.0 | . . . | . . . | . . . | . . . | 72.3 | 117 | 165 | 268 | 378 | 559 | 760 | 1077 | 1120 | 1228 | 1704 † | 1614 | 2201 |
| | 34.74 | 25.0 | . . . | . . . | . . . | . . . | 63.2 | 103 | 145 | 252 | 351 | 516 | 759 | 1002 | 1074 | 1109 | 1529 † | 1544 | 2245 |
| | 38.44 | 22.0 | 16.0 | 24.9 | 34.4 | 49.5 | 59.5 | 93.2 | 134 | 214 | 307 | 441 | 623 | 859 | 985 | 991 | 1395 † | 1308 | 2073 |
| | 42.54 | 21.0 | 14.6 | 25.2 | 34.4 | 49.5 | 56.9 | 85.6 | 108 | 205 | 286 | 407 | 601 | 787 | 856 | 942 | 1237 † | 1181 | 1784 |
| | 47.08 | 18.0 | 13.8 | 20.4 | 27.9 | 49.5 | 46.9 | 77.4 | 115 | 179 | 250 | 378 | 538 | 727 | 738 | 845 | 1151 † | 1105 | 1623 |
| | 52.11 | 17.0 | 12.1 | 17.6 | 27.9 | 44.4 | 44.9 | 71.1 | 106 | 160 | 224 | 348 | 502 | 668 | 725 | 804 | 1058 † | 979 | 1465 |
| | 57.66 | 15.0 | 11.4 | 17.3 | 26.0 | 38.1 | 40.5 | 64.2 | 90.5 | 146 | 200 | 301 | 460 | 577 | 657 | 691 | 909 † | 907 | 1298 |
| | 63.82 | 14.0 | 9.68 | 16.2 | 24.6 | 33.8 | 38.4 | 59.0 | 72.6 | 132 | 177 | 277 | 423 | 531 | 576 | 657 | 856 † | 848 | 1204 |
| | 70.62 | 12.5 | 8.98 | 13.0 | 21.5 | 30.6 | 33.2 | 45.3 | 77.5 | 116 | 169 | 240 | 369 | 420 | 522 | 585 | 737 † | 747 | 1078 |
| | 78.16 | 11.0 | 7.90 | 12.1 | 19.3 | 27.9 | 31.4 | 45.9 | 70.9 | 105 | 135 | 221 | 339 | 400 | 498 | 547 | 674 † | 702 | 950 |
| | 86.50 | 10.0 | 7.34 | 9.26 | 16.9 | 25.2 | 26.9 | 40.0 | 60.3 | 97.5 | 122 | 203 | 278 | 353 | 439 | 477 | 587 † | 649 | 879 |
| | 95.73 | 9.1 | 6.78 | 9.26 | 16.4 | 20.7 | 21.5 | 34.2 | 49.7 | 82.9 | 110 | 188 | 255 | 311 | 351 | 379 | 540 † | 525 | 804 |
| | 105.9 | 8.3 | 6.24 | 8.88 | 14.4 | 19.8 | . . . | 31.4 | 45.4 | 65.9 | 102 | 159 | 235 | 280 | 334 | 349 | 449 † | 481 | 735 |
| | 117.2 | 7.5 | 5.54 | 8.12 | 12.8 | 17.6 | | | | | | | | | | | | | |
| | 129.7 | 6.8 | 4.62 | 7.53 | 11.8 | 16.4 | | | | | | | | | | | | | |
| | 143.6 | 6.1 | 4.43 | 6.88 | 10.6 | 14.5 | | | | | | | | | | | | | |
| | 158.9 | 5.5 | 3.98 | 4.29 | 9.80 | 13.2 | | | | | | | | | | | | | |
| | 175.9 | 5.0 | 3.72 | 4.29 | 8.71 | 11.7 | | | | | | | | | | | | | |
| | 194.6 | 4.5 | 3.19 | 4.29 | 8.03 | 10.4 | | | | | | | | | | | | | |
| | 215.4 | 4.1 | 2.98 | 4.29 | 7.25 | 9.90 | | | | | | | | | | | | | |
| 720 | 23.16 | 31.0 | . . . | . . . | . . . | . . . | 79.0 | 123 | 175 | 302 | 434 | 590 | 855 | 1149 | 1366 | 1342 | 1715 † | 1730 | 2488 |
| | 25.63 | 28.0 | . . . | . . . | . . . | . . . | 74.5 | 123 | 154 | 270 | 380 | 544 | 737 | 1099 | 1149 | 1287 | 1715 † | 1610 | 2428 |
| | 28.36 | 25.0 | . . . | . . . | . . . | . . . | 65.0 | 108 | 148 | 249 | 358 | 501 | 779 | 1004 | 1115 | 1165 | 1601 † | 1539 | 2117 |
| | 31.39 | 22.0 | . . . | . . . | . . . | . . . | 59.8 | 97.1 | 137 | 222 | 313 | 464 | 629 | 891 | 927 | 1016 | 1410 † | 1336 | 1822 |
| | 34.74 | 21.0 | . . . | . . . | . . . | . . . | 52.3 | 85.1 | 120 | 209 | 291 | 428 | 630 | 832 | 889 | 918 | 1269 † | 1277 | 1858 |
| | 38.44 | 18.0 | 13.3 | 20.6 | 28.7 | 41.3 | 49.2 | 77.2 | 111 | 178 | 255 | 366 | 516 | 711 | 818 | 820 | 1158 † | 1082 | 1715 |
| | 42.54 | 17.0 | 12.1 | 20.9 | 28.7 | 41.3 | 47.1 | 70.9 | 89.1 | 170 | 237 | 337 | 498 | 653 | 709 | 780 | 1027 † | 978 | 1477 |
| | 47.08 | 15.0 | 11.4 | 16.9 | 23.2 | 41.3 | 38.8 | 64.1 | 95.2 | 149 | 207 | 313 | 446 | 602 | 614 | 700 | 955 † | 914 | 1343 |
| | 52.11 | 14.0 | 10.0 | 14.7 | 23.2 | 36.8 | 37.1 | 58.9 | 87.5 | 133 | 186 | 289 | 416 | 554 | 600 | 665 | 878 † | 810 | 1212 |
| | 57.66 | 12.5 | 9.45 | 14.3 | 21.5 | 31.5 | 33.5 | 53.2 | 74.9 | 121 | 166 | 249 | 381 | 478 | 545 | 572 | 756 † | 751 | 1074 |
| | 63.82 | 11.0 | 8.01 | 13.4 | 20.3 | 28.0 | 31.7 | 48.8 | 60.1 | 110 | 146 | 230 | 350 | 440 | 476 | 544 | 709 † | 702 | 997 |
| | 70.62 | 10.0 | 7.44 | 10.8 | 17.8 | 25.4 | 27.4 | 37.5 | 64.2 | 96.0 | 140 | 199 | 305 | 348 | 433 | 484 | 613 † | 618 | 892 |
| | 78.16 | 9.1 | 6.54 | 10.0 | 16.0 | 23.2 | 26.0 | 38.0 | 58.7 | 87.0 | 112 | 183 | 281 | 332 | 413 | 452 | 560 † | 581 | 786 |
| | 86.50 | 8.3 | 6.08 | 7.69 | 14.0 | 20.9 | 22.2 | 33.1 | 50.0 | 80.7 | 101 | 168 | 230 | 292 | 364 | 395 | 488 † | 537 | 727 |
| | 95.73 | 7.5 | 5.61 | 7.69 | 13.6 | 17.2 | 17.8 | 28.3 | 41.1 | 68.6 | 91.1 | 156 | 211 | 258 | 291 | 314 | 449 † | 436 | 666 |
| | 105.9 | 6.8 | 5.16 | 7.35 | 11.9 | 16.4 | . . . | 26.0 | 37.6 | 54.6 | 84.2 | 132 | 194 | 232 | 277 | 289 | 373 † | 399 | 608 |
| | 117.2 | 6.1 | 4.58 | 6.73 | 10.6 | 14.6 | | | | | | | | | | | | | |
| | 129.7 | 5.5 | 3.82 | 6.23 | 9.76 | 13.6 | | | | | | | | | | | | | |
| | 143.6 | 5.0 | 3.67 | 5.70 | 8.81 | 12.0 | | | | | | | | | | | | | |
| | 158.9 | 4.5 | 3.30 | 3.56 | 8.11 | 10.9 | | | | | | | | | | | | | |
| | 175.9 | 4.1 | 3.08 | 3.56 | 7.21 | 9.70 | | | | | | | | | | | | | |
| | 194.6 | 3.8 | 2.64 | 3.56 | 6.65 | 8.66 | | | | | | | | | | | | | |
| | 215.4 | 3.3 | 2.47 | 3.56 | 6.00 | 8.19 | | | | | | | | | | | | | |
| 580 | 23.16 | 25.0 | . . . | . . . | . . . | . . . | 63.7 | 99.7 | 141 | 244 | 351 | 476 | 689 | 926 | 1101 | 1081 | 1382 † | 1393 | 2004 |
| | 25.63 | 22.0 | . . . | . . . | . . . | . . . | 60.0 | 99.6 | 124 | 218 | 307 | 439 | 594 | 885 | 926 | 1037 | 1382 † | 1297 | 1956 |
| | 28.36 | 21.0 | . . . | . . . | . . . | . . . | 52.4 | 87.1 | 119 | 201 | 289 | 405 | 629 | 811 | 899 | 939 | 1294 † | 1240 | 1705 |
| | 31.39 | 18.0 | . . . | . . . | . . . | . . . | 48.2 | 78.3 | 110 | 180 | 253 | 375 | 507 | 718 | 747 | 819 | 1136 † | 1076 | 1468 |
| | 34.74 | 17.0 | . . . | . . . | . . . | . . . | 42.1 | 68.8 | 96.7 | 168 | 235 | 345 | 509 | 672 | 716 | 740 | 1025 † | 1029 | 1497 |
| | 38.44 | 15.0 | 10.8 | 16.6 | 23.2 | 33.5 | 39.6 | 62.2 | 89.5 | 143 | 206 | 295 | 416 | 572 | 660 | 660 | 935 † | 872 | 1382 |
| | 42.54 | 14.0 | 9.74 | 16.8 | 23.2 | 33.5 | 37.9 | 57.2 | 71.7 | 137 | 191 | 272 | 401 | 527 | 571 | 628 | 829 † | 788 | 1189 |
| | 47.08 | 12.5 | 9.21 | 13.6 | 18.8 | 33.5 | 31.2 | 51.7 | 76.7 | 120 | 167 | 253 | 360 | 485 | 497 | 564 | 771 † | 737 | 1082 |
| | 52.11 | 11.0 | 8.06 | 11.9 | 18.8 | 29.7 | 29.9 | 47.5 | 70.5 | 107 | 150 | 233 | 336 | 447 | 484 | 536 | 708 † | 653 | 977 |
| | 57.66 | 10.0 | 7.62 | 11.6 | 17.3 | 25.4 | 27.0 | 42.8 | 60.3 | 97.4 | 134 | 201 | 308 | 385 | 439 | 461 | 612 † | 605 | 865 |
| | 63.82 | 9.1 | 6.45 | 10.8 | 16.4 | 22.6 | 25.6 | 39.4 | 48.4 | 88.3 | 118 | 185 | 283 | 355 | 384 | 438 | 572 † | 565 | 803 |
| | 70.62 | 8.3 | 5.99 | 8.77 | 14.4 | 20.4 | 22.1 | 30.3 | 51.7 | 77.4 | 113 | 160 | 246 | 281 | 349 | 390 | 496 † | 498 | 719 |
| | 78.16 | 7.5 | 5.27 | 8.09 | 12.9 | 18.8 | 20.9 | 30.6 | 47.3 | 70.1 | 90.2 | 148 | 226 | 268 | 333 | 364 | 453 † | 468 | 633 |
| | 86.50 | 6.8 | 4.90 | 6.22 | 11.3 | 16.8 | 17.9 | 26.7 | 40.4 | 65.0 | 81.3 | 136 | 185 | 236 | 294 | 318 | 395 † | 433 | 586 |
| | 95.73 | 6.1 | 4.52 | 6.22 | 11.0 | 13.9 | 14.3 | 22.8 | 33.1 | 55.3 | 73.5 | 125 | 170 | 208 | 234 | 253 | 363 † | 353 | 536 |
| | 105.9 | 5.5 | 4.16 | 5.93 | 9.60 | 13.2 | . . . | 21.0 | 30.3 | 44.0 | 67.8 | 106 | 156 | 187 | 223 | 233 | 301 † | 323 | 490 |
| | 117.2 | 5.0 | 3.69 | 5.42 | 8.54 | 11.7 | | | | | | | | | | | | | |
| | 129.7 | 4.5 | 3.08 | 5.02 | 7.87 | 10.9 | | | | | | | | | | | | | |
| | 143.6 | 4.1 | 2.96 | 4.59 | 7.10 | 9.70 | | | | | | | | | | | | | |
| | 158.9 | 3.8 | 2.66 | 2.87 | 6.54 | 8.80 | | | | | | | | | | | | | |
| | 175.9 | 3.3 | 2.48 | 2.87 | 5.81 | 7.81 | | | | | | | | | | | | | |
| | 194.6 | 3.0 | 2.13 | 2.87 | 5.36 | 7.00 | | | | | | | | | | | | | |
| | 215.4 | 2.7 | 1.99 | 2.87 | 4.83 | 6.60 | | | | | | | | | | | | | |

★ See Page 22 for availability of Type A, AR, AXV triple reduction.

† For Size 555ARJ (hollow low speed shaft with shrink disc) the hp rating and torque rating are limited by the shrink disc, see Page 33 for instructions.



© Rexnord Industries, LLC, 1998, 2009.

# Type A, AR & AXV Parallel Shaft
# Torque Ratings/Triple Reduction

(POUND-INCHES AT LOW SPEED SHAFT. . . MULTIPLY VALUES LISTED BY 1000)

| High Speed Shaft rpm | Nominal Ratios ±4% | Approx. Low Speed Shaft rpm | DRIVE SIZE ★ | | | | | | | | | | | | | | | | |
|---|---|---|---|---|---|---|---|---|---|---|---|---|---|---|---|---|---|---|---|
| | | | 305 | 325 | 345 | 365 | 385 | 405 | 425 | 445 | 465 | 485 | 505 | 525 | 535 | 545 | 555 | 565 | 585 |
| 870 | 23.16 | 38.0 | . . . | . . . | . . . | . . . | 154 | 238 | 360 | 605 | 841 | 1181 | 1772 | 2249 | 2667 | 2695 | 3191 † | 3467 | 5091 |
| | 25.63 | 34.0 | . . . | . . . | . . . | . . . | 163 | 263 | 344 | 586 | 850 | 1250 | 1693 | 2393 | 2558 | 2812 | 3530 † | 3697 | 5209 |
| | 28.36 | 31.0 | . . . | . . . | . . . | . . . | 154 | 259 | 360 | 606 | 844 | 1255 | 1870 | 2437 | 2683 | 2889 | 3864 † | 3840 | 5365 |
| | 31.39 | 28.0 | . . . | . . . | . . . | . . . | 166 | 263 | 384 | 587 | 852 | 1253 | 1717 | 2371 | 2588 | 2813 | 3870 † | 3697 | 5153 |
| | 34.74 | 25.0 | . . . | . . . | . . . | . . . | 157 | 258 | 360 | 608 | 845 | 1259 | 1875 | 2443 | 2682 | 2787 | 3922 † | 3841 | 5493 |
| | 38.44 | 22.0 | 44.3 | 70.7 | 96.8 | 137 | 166 | 264 | 383 | 588 | 853 | 1257 | 1745 | 2415 | 2713 | 2813 | 3927 † | 3698 | 5495 |
| | 42.54 | 21.0 | 44.0 | 76.1 | 108 | 152 | 172 | 264 | 336 | 610 | 848 | 1263 | 1810 | 2451 | 2730 | 2923 | 3933 † | 3696 | 5154 |
| | 47.08 | 18.0 | 46.5 | 70.7 | 95.6 | 164 | 166 | 264 | 390 | 588 | 856 | 1259 | 1883 | 2413 | 2571 | 2811 | 3939 † | 3719 | 5494 |
| | 52.11 | 17.0 | 44.1 | 67.8 | 106 | 164 | 173 | 264 | 385 | 597 | 831 | 1262 | 1886 | 2456 | 2730 | 2923 | 3942 † | 3839 | 5494 |
| | 57.66 | 15.0 | 46.5 | 70.8 | 111 | 154 | 168 | 264 | 384 | 591 | 856 | 1263 | 1887 | 2413 | 2728 | 2849 | 3693 † | 3879 | 5493 |
| | 63.82 | 14.0 | 44.8 | 76.1 | 113 | 150 | 173 | 264 | 335 | 582 | 794 | 1265 | 1889 | 2460 | 2733 | 2960 | 3953 † | 3900 | 5395 |
| | 70.62 | 12.5 | 46.5 | 69.5 | 110 | 154 | 174 | 241 | 390 | 592 | 856 | 1265 | 1892 | 2195 | 2731 | 3004 | 3711 † | 3898 | 5451 |
| | 78.16 | 11.0 | 44.8 | 71.1 | 113 | 156 | 176 | 253 | 390 | 583 | 776 | 1267 | 1893 | 2193 | 2733 | 3023 | 3720 † | 3936 | 5450 |
| | 86.50 | 10.0 | 46.6 | 60.6 | 110 | 155 | 177 | 241 | 372 | 587 | 796 | 1267 | 1699 | 2197 | 2735 | 3036 | 3731 † | 3936 | 5461 |
| | 95.73 | 9.1 | 45.2 | 64.4 | 113 | 147 | 153 | 241 | 340 | 586 | 777 | 1270 | 1696 | 2196 | 2453 | 2700 | 3736 † | 3545 | 5492 |
| | 105.9 | 8.3 | 46.6 | 70.9 | 111 | 154 | . . . | 241 | 340 | 499 | 780 | 1174 | 1702 | 2141 | 2448 | 2706 | 3463 † | 3556 | 5492 |
| | 117.2 | 7.5 | 45.7 | 71.3 | 107 | 150 | | | | | | | | | | | | | |
| | 129.7 | 6.8 | 43.1 | 71.0 | 109 | 155 | | | | | | | | | | | | | |
| | 143.6 | 6.1 | 45.6 | 71.3 | 107 | 150 | | | | | | | | | | | | | |
| | 158.9 | 5.5 | 45.6 | 51.0 | 111 | 155 | | | | | | | | | | | | | |
| | 175.9 | 5.0 | 45.7 | 56.1 | 107 | 150 | | | | | | | | | | | | | |
| | 194.6 | 4.5 | 45.6 | 60.2 | 109 | 144 | | | | | | | | | | | | | |
| | 215.4 | 4.1 | 45.7 | 66.2 | 108 | 150 | | | | | | | | | | | | | |
| 720 | 23.16 | 31.0 | . . . | . . . | . . . | . . . | 154 | 240 | 360 | 607 | 843 | 1181 | 1772 | 2248 | 2666 | 2694 | 3359 † | 3468 | 5091 |
| | 25.63 | 28.0 | . . . | . . . | . . . | . . . | 163 | 262 | 344 | 588 | 852 | 1254 | 1692 | 2415 | 2556 | 2812 | 3715 † | 3698 | 5494 |
| | 28.36 | 25.0 | . . . | . . . | . . . | . . . | 154 | 260 | 361 | 608 | 845 | 1257 | 1876 | 2443 | 2681 | 2888 | 3918 † | 3839 | 5494 |
| | 31.39 | 22.0 | . . . | . . . | . . . | . . . | 166 | 264 | 385 | 587 | 852 | 1256 | 1717 | 2370 | 2588 | 2812 | 3869 † | 3698 | 5154 |
| | 34.74 | 21.0 | . . . | . . . | . . . | . . . | 157 | 258 | 360 | 610 | 846 | 1261 | 1881 | 2451 | 2683 | 2788 | 3934 † | 3839 | 5493 |
| | 38.44 | 18.0 | 44.5 | 70.7 | 97.6 | 138 | 166 | 264 | 384 | 591 | 856 | 1261 | 1746 | 2415 | 2722 | 2813 | 3939 † | 3696 | 5493 |
| | 42.54 | 17.0 | 44.0 | 76.2 | 109 | 153 | 172 | 264 | 335 | 611 | 849 | 1264 | 1812 | 2457 | 2733 | 2924 | 3946 † | 3698 | 5156 |
| | 47.08 | 15.0 | 46.4 | 70.8 | 96.0 | 165 | 166 | 264 | 390 | 592 | 856 | 1260 | 1886 | 2414 | 2585 | 2814 | 3949 † | 3717 | 5494 |
| | 52.11 | 14.0 | 44.0 | 68.4 | 107 | 164 | 172 | 264 | 384 | 600 | 833 | 1266 | 1888 | 2461 | 2730 | 2921 | 3953 † | 3838 | 5492 |
| | 57.66 | 12.5 | 46.5 | 70.7 | 110 | 154 | 168 | 265 | 384 | 592 | 858 | 1263 | 1888 | 2415 | 2735 | 2850 | 3712 † | 3881 | 5492 |
| | 63.82 | 11.0 | 44.8 | 76.1 | 113 | 150 | 172 | 264 | 335 | 586 | 792 | 1270 | 1889 | 2463 | 2729 | 2962 | 3956 † | 3902 | 5398 |
| | 70.62 | 10.0 | 46.6 | 69.8 | 110 | 155 | 174 | 241 | 390 | 592 | 857 | 1267 | 1890 | 2198 | 2738 | 3004 | 3730 † | 3897 | 5450 |
| | 78.16 | 9.1 | 44.8 | 71.0 | 113 | 157 | 176 | 253 | 391 | 584 | 778 | 1268 | 1896 | 2200 | 2739 | 3019 | 3735 † | 3936 | 5448 |
| | 86.50 | 8.3 | 46.6 | 60.8 | 110 | 155 | 176 | 241 | 373 | 587 | 797 | 1267 | 1699 | 2196 | 2740 | 3038 | 3748 † | 3935 | 5458 |
| | 95.73 | 7.5 | 45.2 | 64.7 | 113 | 148 | 153 | 241 | 339 | 586 | 777 | 1273 | 1695 | 2201 | 2457 | 2703 | 3754 † | 3558 | 5497 |
| | 105.9 | 6.8 | 46.6 | 70.9 | 111 | 155 | . . . | 241 | 340 | 499 | 778 | 1178 | 1698 | 2144 | 2454 | 2707 | 3476 † | 3565 | 5489 |
| | 117.2 | 6.1 | 45.6 | 71.4 | 107 | 150 | | | | | | | | | | | | | |
| | 129.7 | 5.5 | 43.0 | 71.0 | 109 | 155 | | | | | | | | | | | | | |
| | 143.6 | 5.0 | 45.6 | 71.4 | 107 | 150 | | | | | | | | | | | | | |
| | 158.9 | 4.5 | 45.7 | 51.2 | 111 | 155 | | | | | | | | | | | | | |
| | 175.9 | 4.1 | 45.7 | 56.2 | 107 | 150 | | | | | | | | | | | | | |
| | 194.6 | 3.8 | 45.6 | 60.4 | 109 | 145 | | | | | | | | | | | | | |
| | 215.4 | 3.3 | 45.8 | 66.4 | 108 | 150 | | | | | | | | | | | | | |
| 580 | 23.16 | 25.0 | . . . | . . . | . . . | . . . | 154 | 242 | 361 | 609 | 847 | 1183 | 1773 | 2249 | 2668 | 2694 | 3360 † | 3466 | 5091 |
| | 25.63 | 22.0 | . . . | . . . | . . . | . . . | 163 | 264 | 344 | 590 | 855 | 1257 | 1693 | 2414 | 2558 | 2813 | 3716 † | 3698 | 5494 |
| | 28.36 | 21.0 | . . . | . . . | . . . | . . . | 154 | 260 | 361 | 609 | 847 | 1262 | 1881 | 2450 | 2684 | 2890 | 3931 † | 3840 | 5493 |
| | 31.39 | 18.0 | . . . | . . . | . . . | . . . | 166 | 264 | 384 | 591 | 855 | 1261 | 1718 | 2371 | 2589 | 2814 | 3870 † | 3697 | 5155 |
| | 34.74 | 17.0 | . . . | . . . | . . . | . . . | 157 | 259 | 360 | 608 | 849 | 1262 | 1887 | 2458 | 2682 | 2790 | 3944 † | 3840 | 5494 |
| | 38.44 | 15.0 | 44.8 | 70.7 | 97.9 | 139 | 166 | 264 | 384 | 590 | 858 | 1262 | 1747 | 2412 | 2727 | 2811 | 3948 † | 3698 | 5495 |
| | 42.54 | 14.0 | 44.0 | 76.1 | 109 | 155 | 172 | 264 | 335 | 611 | 850 | 1266 | 1812 | 2462 | 2732 | 2923 | 3954 † | 3699 | 5153 |
| | 47.08 | 12.5 | 46.6 | 70.7 | 96.6 | 166 | 166 | 265 | 390 | 592 | 857 | 1264 | 1890 | 2415 | 2597 | 2814 | 3957 † | 3721 | 5494 |
| | 52.11 | 11.0 | 44.0 | 68.7 | 108 | 164 | 172 | 265 | 384 | 599 | 834 | 1267 | 1893 | 2465 | 2734 | 2923 | 3957 † | 3841 | 5496 |
| | 57.66 | 10.0 | 46.6 | 71.2 | 110 | 154 | 168 | 264 | 384 | 592 | 860 | 1265 | 1895 | 2415 | 2735 | 2851 | 3730 † | 3881 | 5491 |
| | 63.82 | 9.1 | 44.8 | 76.1 | 113 | 150 | 173 | 265 | 335 | 584 | 794 | 1268 | 1896 | 2467 | 2733 | 2960 | 3962 † | 3898 | 5397 |
| | 70.62 | 8.3 | 46.5 | 70.3 | 111 | 154 | 174 | 241 | 390 | 592 | 859 | 1265 | 1892 | 2203 | 2739 | 3004 | 3747 † | 3898 | 5453 |
| | 78.16 | 7.5 | 44.8 | 71.3 | 113 | 157 | 176 | 253 | 391 | 584 | 778 | 1273 | 1893 | 2204 | 2741 | 3018 | 3751 † | 3936 | 5447 |
| | 86.50 | 6.8 | 46.6 | 61.1 | 111 | 155 | 176 | 241 | 374 | 587 | 796 | 1273 | 1696 | 2203 | 2747 | 3036 | 3766 † | 3939 | 5461 |
| | 95.73 | 6.1 | 45.2 | 64.9 | 114 | 148 | 153 | 241 | 339 | 587 | 778 | 1266 | 1696 | 2203 | 2453 | 2703 | 3767 † | 3576 | 5492 |
| | 105.9 | 5.5 | 46.6 | 71.1 | 111 | 154 | . . . | 242 | 340 | 500 | 778 | 1174 | 1695 | 2145 | 2452 | 2710 | 3482 † | 3582 | 5492 |
| | 117.2 | 5.0 | 45.6 | 71.4 | 108 | 149 | | | | | | | | | | | | | |
| | 129.7 | 4.5 | 43.1 | 71.0 | 109 | 154 | | | | | | | | | | | | | |
| | 143.6 | 4.1 | 45.7 | 71.4 | 108 | 150 | | | | | | | | | | | | | |
| | 158.9 | 3.8 | 45.7 | 51.2 | 111 | 155 | | | | | | | | | | | | | |
| | 175.9 | 3.3 | 45.7 | 56.3 | 107 | 150 | | | | | | | | | | | | | |
| | 194.6 | 3.0 | 45.7 | 60.5 | 109 | 146 | | | | | | | | | | | | | |
| | 215.4 | 2.7 | 45.8 | 66.4 | 107 | 150 | | | | | | | | | | | | | |

★ See Page 22 for availability of Type A, AR, AXV triple reduction.

† For Size 555ARJ (hollow low speed shaft with shrink disc) the hp rating and torque rating are limited by the shrink disc, see Page 33 for instructions.

© Rexnord Industries,LLC, 1998, 2009.

# Type A, AR & AXV Parallel Shaft
# Horsepower Ratings/Quadruple Reduction

| High Speed Shaft rpm | Nominal Ratios ±5% | Approx. Low Speed Shaft rpm | DRIVE SIZE | | | | | | | | | |
|---|---|---|---|---|---|---|---|---|---|---|---|---|
| | | | 385 | 405 | 425 | 445 | 465 | 485 | 505 | 525 | 535 | 555 |
| 1750 | 105.9 | 16.5 | 42.6 | | | | | | | | | |
| | 117.2 | 15.0 | 40.8 | 56.5 | 80.3 | 139 | 211 | 303 | 462 | 570 | 594 | 812 † |
| | 129.7 | 13.5 | 36.9 | 58.4 | 85.8 | 133 | 184 | 282 | 387 | 524 | 594 | 812 † |
| | 143.6 | 12.0 | 35.3 | 47.3 | 78.9 | 117 | 166 | 260 | 347 | 483 | 523 | 765 † |
| | 158.9 | 11.0 | 28.6 | 41.7 | 67.5 | 106 | 147 | 224 | 333 | 416 | 475 | 706 † |
| | 175.9 | 10.0 | 28.6 | 38.4 | 54.1 | 96.5 | 130 | 206 | 299 | 384 | 415 | 610 † |
| | 194.6 | 9.0 | 23.2 | 32.9 | 57.9 | 84.5 | 125 | 179 | 266 | 291 | 377 | 531 † |
| | 215.4 | 8.1 | 22.2 | 30.8 | 52.9 | 76.6 | 112 | 165 | 235 | 289 | 360 | 507 † |
| | 238.4 | 7.5 | 20.0 | 31.8 | 45.1 | 71.6 | 99.6 | 145 | 228 | 285 | 291 | 454 † |
| | 263.8 | 6.6 | 19.2 | 25.7 | 37.1 | 64.8 | 87.8 | 133 | 210 | 264 | 284 | 395 † |
| | 291.9 | 6.0 | 15.6 | 22.4 | 39.0 | 56.9 | 84.1 | 115 | 183 | 208 | 259 | 365 † |
| | 323.1 | 5.4 | 15.5 | 20.9 | 35.6 | 51.4 | 67.1 | 106 | 168 | 184 | 247 | 303 † |
| | 357.5 | 5.0 | 13.3 | 18.2 | 30.5 | 47.7 | 60.5 | 97.6 | 137 | 167 | 218 | 279 † |
| | 395.7 | 4.4 | 10.6 | 16.9 | 25.0 | 40.6 | 54.7 | 90.2 | 116 | 154 | 174 | 241 † |
| | 437.9 | 4.0 | . . . | 15.6 | 22.8 | 32.3 | 50.5 | 82.9 | 111 | 139 | 153 | 222 † |
| 1430 | 105.9 | 13.5 | 34.8 | | | | | | | | | |
| | 117.2 | 12.0 | 33.4 | 46.2 | 65.6 | 114 | 172 | 248 | 378 | 466 | 485 | 705 † |
| | 129.7 | 11.0 | 30.1 | 47.8 | 70.1 | 109 | 151 | 231 | 316 | 429 | 485 | 674 † |
| | 143.6 | 10.0 | 28.8 | 38.7 | 64.5 | 95.9 | 136 | 212 | 283 | 395 | 427 | 626 † |
| | 158.9 | 9.0 | 23.4 | 34.1 | 55.2 | 87.0 | 121 | 183 | 272 | 340 | 389 | 578 † |
| | 175.9 | 8.1 | 23.3 | 31.4 | 44.2 | 78.8 | 106 | 169 | 244 | 314 | 339 | 501 † |
| | 194.6 | 7.5 | 18.9 | 27.2 | 47.3 | 69.1 | 102 | 146 | 218 | 242 | 309 | 436 † |
| | 215.4 | 6.6 | 18.1 | 25.1 | 43.2 | 62.6 | 91.8 | 135 | 192 | 237 | 294 | 418 † |
| | 238.4 | 6.0 | 16.4 | 26.0 | 36.9 | 58.5 | 81.4 | 118 | 187 | 233 | 242 | 372 † |
| | 263.8 | 5.4 | 15.7 | 21.0 | 30.3 | 53.0 | 71.8 | 109 | 171 | 216 | 232 | 324 † |
| | 291.9 | 5.0 | 12.7 | 18.3 | 31.9 | 46.5 | 68.8 | 94.2 | 149 | 170 | 212 | 299 † |
| | 323.1 | 4.4 | 12.7 | 17.0 | 29.1 | 42.0 | 54.8 | 86.8 | 137 | 150 | 202 | 248 † |
| | 357.5 | 4.0 | 10.8 | 14.9 | 24.9 | 39.0 | 49.4 | 79.8 | 112 | 136 | 178 | 228 † |
| | 395.7 | 3.6 | 8.68 | 13.8 | 20.4 | 33.2 | 44.7 | 73.7 | 94.7 | 126 | 142 | 197 † |
| | 437.9 | 3.2 | . . . | 12.7 | 18.7 | 26.4 | 41.3 | 67.8 | 90.3 | 113 | 125 | 182 † |
| 1170 | 105.9 | 11.0 | 28.5 | | | | | | | | | |
| | 117.2 | 10.0 | 27.3 | 37.8 | 53.7 | 93.1 | 141 | 203 | 310 | 382 | 402 | 586 † |
| | 129.7 | 9.0 | 24.7 | 39.1 | 57.4 | 89.4 | 123 | 189 | 259 | 351 | 402 | 552 † |
| | 143.6 | 8.1 | 23.6 | 31.6 | 52.8 | 78.6 | 111 | 174 | 232 | 324 | 350 | 513 † |
| | 158.9 | 7.5 | 19.1 | 27.9 | 45.2 | 71.3 | 98.7 | 150 | 223 | 278 | 318 | 473 † |
| | 175.9 | 6.6 | 19.1 | 25.7 | 36.2 | 64.5 | 87.1 | 138 | 200 | 257 | 278 | 411 † |
| | 194.6 | 6.0 | 15.5 | 22.4 | 38.7 | 56.6 | 83.4 | 120 | 178 | 201 | 253 | 358 † |
| | 215.4 | 5.4 | 14.8 | 20.6 | 35.4 | 51.2 | 75.2 | 110 | 157 | 194 | 241 | 348 † |
| | 238.4 | 5.0 | 13.4 | 21.3 | 30.3 | 47.9 | 66.6 | 96.8 | 153 | 191 | 201 | 306 † |
| | 263.8 | 4.4 | 12.8 | 17.2 | 24.8 | 43.3 | 58.8 | 89.2 | 140 | 176 | 190 | 266 † |
| | 291.9 | 4.0 | 10.4 | 15.0 | 26.1 | 38.0 | 56.3 | 77.1 | 122 | 139 | 173 | 245 † |
| | 323.1 | 3.6 | 10.4 | 13.9 | 23.8 | 34.4 | 44.9 | 71.0 | 112 | 123 | 165 | 204 † |
| | 357.5 | 3.2 | 8.87 | 12.2 | 20.4 | 31.9 | 40.4 | 65.3 | 91.8 | 112 | 146 | 187 † |
| | 395.7 | 2.9 | 7.10 | 11.3 | 16.7 | 27.1 | 36.6 | 60.4 | 77.5 | 103 | 116 | 162 † |
| | 437.9 | 2.7 | . . . | 10.4 | 15.3 | 21.6 | 33.8 | 55.5 | 73.9 | 92.8 | 103 | 149 † |

† For Size 555ARJ (hollow low speed shaft with shrink disc) the hp rating and torque rating are limited by the shrink disc, see Page 33 for instructions.

| High Speed Shaft rpm | AVAILABILITY OF TYPES A / AR / AXV QUADRUPLE REDUCTION | | | | | | | | | | |
|---|---|---|---|---|---|---|---|---|---|---|---|
| | TYPE | 385 | 405 | 425 | 445 | 465 | 485 | 505 | 525 | 535 | 555 |
| All | A | X | X | X | X | X | X | X | X | . . . | . . . |
| | AR | . . . | X | X | X | X | X | X | . . . | X | X |
| | AXV | . . . | X | X | X | X | X | X | . . . | X | X |


© Rexnord Industries, LLC, 1998, 2009.

# Type A, AR & AXV Parallel Shaft
# Torque Ratings/Quadruple Reduction

(POUND-INCHES AT LOW SPEED SHAFT. . . MULTIPLY VALUES LISTED BY 1000)

| High Speed Shaft rpm | Nominal Ratios ±5% | Approx. Low Speed Shaft rpm | DRIVE SIZE 385 | 405 | 425 | 445 | 465 | 485 | 505 | 525 | 535 | 555 |
|---|---|---|---|---|---|---|---|---|---|---|---|---|
| 1750 | 105.9 | 16.5 | 166 | | | | | | | | | |
| | 117.2 | 15.0 | 172 | 240 | 335 | 568 | 852 | 1265 | 1886 | 2462 | 2429 | 3526 † |
| | 129.7 | 13.5 | 168 | 264 | 390 | 589 | 857 | 1264 | 1761 | 2412 | 2678 | 3901 † |
| | 143.6 | 12.0 | 174 | 252 | 384 | 600 | 837 | 1268 | 1812 | 2462 | 2731 | 3955 † |
| | 158.9 | 11.0 | 163 | 252 | 384 | 589 | 856 | 1265 | 1894 | 2413 | 2736 | 3958 † |
| | 175.9 | 10.0 | 176 | 253 | 335 | 584 | 794 | 1266 | 1829 | 2467 | 2731 | 3730 † |
| | 194.6 | 9.0 | 167 | 236 | 390 | 592 | 862 | 1269 | 1891 | 2136 | 2736 | 3739 † |
| | 215.4 | 8.1 | 173 | 241 | 390 | 584 | 838 | 1273 | 1828 | 2197 | 2740 | 3844 † |
| | 238.4 | 7.5 | 168 | 265 | 373 | 593 | 860 | 1271 | 1893 | 2412 | 2446 | 3754 † |
| | 263.8 | 6.6 | 175 | 253 | 340 | 584 | 795 | 1269 | 1899 | 2475 | 2728 | 3761 † |
| | 291.9 | 6.0 | 164 | 241 | 390 | 593 | 860 | 1265 | 1899 | 2201 | 2743 | 3769 † |
| | 323.1 | 5.4 | 176 | 253 | 390 | 584 | 778 | 1269 | 1899 | 2209 | 2744 | 3488 † |
| | 357.5 | 5.0 | 177 | 241 | 374 | 587 | 797 | 1272 | 1695 | 2206 | 2749 | 3496 † |
| | 395.7 | 4.4 | 153 | 241 | 340 | 587 | 779 | 1272 | 1700 | 2201 | 2461 | 3502 † |
| | 437.9 | 4.0 | . . . | 242 | 340 | 500 | 779 | 1272 | 1724 | 2151 | 2456 | 3511 † |
| 1430 | 105.9 | 13.5 | 166 | | | | | | | | | |
| | 117.2 | 12.0 | 173 | 241 | 335 | 570 | 850 | 1267 | 1889 | 2463 | 2427 | 3747 † |
| | 129.7 | 11.0 | 168 | 265 | 390 | 591 | 861 | 1267 | 1760 | 2416 | 2676 | 3962 † |
| | 143.6 | 10.0 | 174 | 253 | 384 | 602 | 840 | 1265 | 1808 | 2464 | 2729 | 3960 † |
| | 158.9 | 9.0 | 163 | 252 | 384 | 592 | 862 | 1264 | 1893 | 2413 | 2742 | 3966 † |
| | 175.9 | 8.1 | 176 | 253 | 335 | 584 | 792 | 1271 | 1827 | 2468 | 2730 | 3749 † |
| | 194.6 | 7.5 | 166 | 239 | 390 | 592 | 861 | 1266 | 1897 | 2174 | 2744 | 3757 † |
| | 215.4 | 6.6 | 172 | 241 | 390 | 584 | 841 | 1275 | 1828 | 2205 | 2738 | 3879 † |
| | 238.4 | 6.0 | 168 | 265 | 374 | 592 | 860 | 1266 | 1900 | 2414 | 2489 | 3764 † |
| | 263.8 | 5.4 | 175 | 253 | 340 | 585 | 796 | 1272 | 1892 | 2478 | 2727 | 3776 † |
| | 291.9 | 5.0 | 163 | 241 | 390 | 593 | 861 | 1268 | 1892 | 2201 | 2748 | 3779 † |
| | 323.1 | 4.4 | 177 | 252 | 390 | 584 | 778 | 1272 | 1895 | 2204 | 2746 | 3494 † |
| | 357.5 | 4.0 | 176 | 242 | 374 | 587 | 796 | 1273 | 1696 | 2199 | 2747 | 3496 † |
| | 395.7 | 3.6 | 153 | 241 | 339 | 587 | 779 | 1272 | 1699 | 2204 | 2458 | 3503 † |
| | 437.9 | 3.2 | . . . | 241 | 341 | 500 | 780 | 1273 | 1717 | 2140 | 2455 | 3523 † |
| 1170 | 105.9 | 11.0 | 166 | | | | | | | | | |
| | 117.2 | 10.0 | 172 | 241 | 335 | 569 | 851 | 1268 | 1893 | 2467 | 2458 | 3806 † |
| | 129.7 | 9.0 | 168 | 265 | 390 | 592 | 857 | 1267 | 1763 | 2416 | 2711 | 3966 † |
| | 143.6 | 8.1 | 174 | 252 | 384 | 603 | 838 | 1269 | 1812 | 2471 | 2734 | 3967 † |
| | 158.9 | 7.5 | 163 | 252 | 384 | 593 | 859 | 1267 | 1897 | 2411 | 2739 | 3966 † |
| | 175.9 | 6.6 | 176 | 253 | 335 | 584 | 795 | 1268 | 1830 | 2469 | 2736 | 3759 † |
| | 194.6 | 6.0 | 167 | 240 | 390 | 593 | 860 | 1272 | 1893 | 2207 | 2746 | 3770 † |
| | 215.4 | 5.4 | 172 | 241 | 391 | 584 | 842 | 1269 | 1827 | 2206 | 2744 | 3947 † |
| | 238.4 | 5.0 | 168 | 266 | 375 | 593 | 860 | 1269 | 1900 | 2418 | 2527 | 3785 † |
| | 263.8 | 4.4 | 174 | 253 | 340 | 584 | 796 | 1273 | 1893 | 2468 | 2729 | 3789 † |
| | 291.9 | 4.0 | 163 | 241 | 390 | 593 | 861 | 1269 | 1894 | 2200 | 2741 | 3784 † |
| | 323.1 | 3.6 | 177 | 252 | 390 | 584 | 779 | 1272 | 1893 | 2208 | 2742 | 3512 † |
| | 357.5 | 3.2 | 176 | 242 | 375 | 587 | 796 | 1273 | 1699 | 2213 | 2753 | 3504 † |
| | 395.7 | 2.9 | 153 | 241 | 340 | 586 | 780 | 1274 | 1699 | 2202 | 2454 | 3521 † |
| | 437.9 | 2.7 | . . . | 241 | 341 | 500 | 780 | 1274 | 1717 | 2148 | 2473 | 3525 † |

† For Size 555ARJ (hollow low speed shaft with shrink disc) the hp rating and torque rating are limited by the shrink disc, see Page 33 for instructions.

| High Speed Shaft rpm | AVAILABILITY OF TYPES A / AR /AXV QUADRUPLE REDUCTION TYPE | 385 | 405 | 425 | 445 | 465 | 485 | 505 | 525 | 535 | 555 |
|---|---|---|---|---|---|---|---|---|---|---|---|
| All | A | X | X | X | X | X | X | X | X | . . . | . . . |
| | AR | . . . | X | X | X | X | X | X | . . . | X | X |
| | AXV | . . . | X | X | X | X | X | X | . . . | X | X |

© Rexnord Industries,LLC, 1998, 2009.

# Type A, AR & AXV Parallel Shaft
# Horsepower Ratings/Quadruple Reduction

| High Speed Shaft rpm | Nominal Ratios ±5% | Approx. Low Speed Shaft rpm | DRIVE SIZE | | | | | | | | | |
|---|---|---|---|---|---|---|---|---|---|---|---|---|
| | | | 385 | 405 | 425 | 445 | 465 | 485 | 505 | 525 | 535 | 555 |
| 870 | **105.9** | **8.3** | 21.2 | | | | | | | | | |
| | **117.2** | **7.5** | 20.3 | 28.2 | 39.9 | 69.2 | 105 | 151 | 231 | 284 | 307 | 435 † |
| | **129.7** | **6.8** | 18.3 | 29.1 | 42.7 | 66.5 | 91.8 | 141 | 192 | 261 | 302 | 411 † |
| | **143.6** | **6.1** | 17.5 | 23.5 | 39.2 | 58.6 | 82.9 | 130 | 172 | 241 | 260 | 382 † |
| | **158.9** | **5.5** | 14.3 | 20.8 | 33.6 | 53.0 | 73.5 | 112 | 166 | 207 | 237 | 352 † |
| | **175.9** | **5.0** | 14.2 | 19.1 | 26.9 | 48.0 | 64.8 | 103 | 148 | 191 | 206 | 307 † |
| | **194.6** | **4.5** | 11.5 | 16.8 | 28.8 | 42.1 | 62.1 | 89.0 | 133 | 152 | 188 | 267 † |
| | **215.4** | **4.1** | 11.0 | 15.3 | 26.3 | 38.1 | 56.0 | 82.0 | 117 | 144 | 179 | 261 † |
| | **238.4** | **3.8** | 9.95 | 15.8 | 22.5 | 35.6 | 49.6 | 72.0 | 114 | 142 | 152 | 228 † |
| | **263.8** | **3.3** | 9.52 | 12.8 | 18.4 | 32.2 | 43.7 | 66.3 | 104 | 131 | 141 | 199 † |
| | **291.9** | **3.0** | 7.76 | 11.2 | 19.4 | 28.3 | 41.9 | 57.4 | 91.0 | 104 | 129 | 183 † |
| | **323.1** | **2.7** | 7.71 | 10.4 | 17.7 | 25.6 | 33.4 | 52.9 | 83.6 | 91.4 | 123 | 152 † |
| | **357.5** | **2.5** | 6.60 | 9.05 | 15.2 | 23.7 | 30.1 | 48.6 | 68.3 | 83.1 | 108 | 140 † |
| | **395.7** | **2.2** | 5.28 | 8.42 | 12.4 | 20.2 | 27.2 | 44.9 | 57.6 | 76.8 | 86.5 | 121 † |
| | **437.9** | **2.0** | . . . | 7.74 | 11.4 | 16.1 | 25.1 | 41.3 | 55.0 | 69.0 | 76.3 | 111 † |
| 720 | **105.9** | **6.8** | 17.5 | | | | | | | | | |
| | **117.2** | **6.1** | 16.8 | 23.3 | 33.0 | 57.3 | 87.0 | 125 | 191 | 236 | 257 | 360 † |
| | **129.7** | **5.5** | 15.2 | 24.1 | 35.3 | 55.1 | 76.0 | 116 | 159 | 216 | 250 | 340 † |
| | **143.6** | **5.0** | 14.5 | 19.5 | 32.5 | 48.5 | 68.7 | 107 | 143 | 200 | 215 | 316 † |
| | **158.9** | **4.5** | 11.8 | 17.2 | 27.8 | 43.9 | 60.8 | 92.4 | 137 | 171 | 196 | 292 † |
| | **175.9** | **4.1** | 11.8 | 15.8 | 22.3 | 39.7 | 53.7 | 85.2 | 123 | 159 | 171 | 255 † |
| | **194.6** | **3.8** | 9.53 | 14.0 | 23.8 | 34.9 | 51.4 | 73.7 | 110 | 127 | 156 | 222 † |
| | **215.4** | **3.3** | 9.12 | 12.7 | 21.8 | 31.5 | 46.4 | 67.9 | 96.8 | 119 | 149 | 216 † |
| | **238.4** | **3.0** | 8.24 | 13.1 | 18.7 | 29.5 | 41.0 | 59.6 | 94.2 | 117 | 127 | 189 † |
| | **263.8** | **2.7** | 7.88 | 10.6 | 15.3 | 26.7 | 36.2 | 54.9 | 86.5 | 109 | 117 | 165 † |
| | **291.9** | **2.5** | 6.42 | 9.24 | 16.0 | 23.4 | 34.7 | 47.5 | 75.3 | 85.8 | 107 | 152 † |
| | **323.1** | **2.2** | 6.38 | 8.59 | 14.7 | 21.2 | 27.6 | 43.8 | 69.2 | 75.7 | 102 | 126 † |
| | **357.5** | **2.0** | 5.46 | 7.49 | 12.6 | 19.6 | 24.9 | 40.2 | 56.5 | 68.8 | 89.8 | 116 † |
| | **395.7** | **1.8** | 4.37 | 6.97 | 10.3 | 16.7 | 22.5 | 37.2 | 47.7 | 63.6 | 71.6 | 100 † |
| | **437.9** | **1.6** | . . . | 6.40 | 9.40 | 13.3 | 20.8 | 34.1 | 45.5 | 57.1 | 63.1 | 92.1 † |
| 580 | **105.9** | **5.5** | 14.1 | | | | | | | | | |
| | **117.2** | **5.0** | 13.5 | 18.8 | 26.6 | 46.1 | 70.1 | 101 | 154 | 190 | 209 | 290 † |
| | **129.7** | **4.5** | 12.2 | 19.4 | 28.4 | 44.4 | 61.3 | 93.8 | 128 | 174 | 202 | 274 † |
| | **143.6** | **4.1** | 11.7 | 15.7 | 26.2 | 39.1 | 55.4 | 86.4 | 115 | 161 | 173 | 255 † |
| | **158.9** | **3.8** | 9.52 | 13.9 | 22.4 | 35.4 | 49.0 | 74.5 | 111 | 138 | 158 | 235 † |
| | **175.9** | **3.3** | 9.47 | 12.7 | 17.9 | 32.0 | 43.2 | 68.6 | 99.0 | 128 | 138 | 206 † |
| | **194.6** | **3.0** | 7.67 | 11.3 | 19.2 | 28.1 | 41.4 | 59.4 | 88.6 | 103 | 126 | 179 † |
| | **215.4** | **2.7** | 7.34 | 10.2 | 17.5 | 25.4 | 37.4 | 54.7 | 78.0 | 96.2 | 120 | 174 † |
| | **238.4** | **2.5** | 6.64 | 10.5 | 15.0 | 23.8 | 33.1 | 48.0 | 75.9 | 94.5 | 103 | 153 † |
| | **263.8** | **2.2** | 6.35 | 8.53 | 12.3 | 21.5 | 29.2 | 44.2 | 69.7 | 87.6 | 94.3 | 133 † |
| | **291.9** | **2.0** | 5.18 | 7.45 | 12.9 | 18.9 | 27.9 | 38.3 | 60.7 | 69.2 | 86.1 | 123 † |
| | **323.1** | **1.8** | 5.14 | 6.92 | 11.8 | 17.0 | 22.3 | 35.3 | 55.8 | 61.0 | 82.1 | 102 † |
| | **357.5** | **1.6** | 4.40 | 6.04 | 10.1 | 15.8 | 20.1 | 32.4 | 45.5 | 55.4 | 72.3 | 93.6 † |
| | **395.7** | **1.5** | 3.52 | 5.61 | 8.29 | 13.4 | 18.1 | 29.9 | 38.4 | 51.2 | 57.7 | 80.8 † |
| | **437.9** | **1.3** | . . . | 5.16 | 7.57 | 10.7 | 16.7 | 27.5 | 36.6 | 46.0 | 50.9 | 74.3 † |

† For Size 555ARJ (hollow low speed shaft with shrink disc) the hp rating and torque rating are limited by the shrink disc, see Page 33 for instructions.

| High Speed Shaft rpm | AVAILABILITY OF TYPES A / AR / AXV QUADRUPLE REDUCTION | | | | | | | | | | |
|---|---|---|---|---|---|---|---|---|---|---|---|
| | TYPE | 385 | 405 | 425 | 445 | 465 | 485 | 505 | 525 | 535 | 555 |
| All | **A** | X | X | X | X | X | X | X | X | . . . | . . . |
| | **AR** | . . . | X | X | X | X | X | X | . . . | X | X |
| | **AXV** | . . . | X | X | X | X | X | X | . . . | X | X |


© Rexnord Industries, LLC, 1998, 2009.

# Type A, AR & AXV Parallel Shaft
# Torque Ratings/Quadruple Reduction

(POUND-INCHES AT LOW SPEED SHAFT. . . MULTIPLY VALUES LISTED BY 1000)

| High Speed Shaft rpm | Nominal Ratios ±5% | Approx. Low Speed Shaft rpm | DRIVE SIZE 385 | 405 | 425 | 445 | 465 | 485 | 505 | 525 | 535 | 555 |
|---|---|---|---|---|---|---|---|---|---|---|---|---|
| 870 | 105.9 | 8.3 | 166 | | | | | | | | | |
| | 117.2 | 7.5 | 172 | 241 | 335 | 568 | 852 | 1268 | 1897 | 2467 | 2525 | 3800 † |
| | 129.7 | 6.8 | 168 | 265 | 390 | 592 | 860 | 1271 | 1757 | 2416 | 2739 | 3971 † |
| | 143.6 | 6.1 | 174 | 252 | 384 | 604 | 841 | 1275 | 1806 | 2472 | 2731 | 3972 † |
| | 158.9 | 5.5 | 164 | 253 | 384 | 593 | 861 | 1272 | 1899 | 2415 | 2746 | 3969 † |
| | 175.9 | 5.0 | 176 | 253 | 335 | 585 | 796 | 1273 | 1821 | 2468 | 2727 | 3776 † |
| | 194.6 | 4.5 | 166 | 242 | 390 | 593 | 861 | 1269 | 1902 | 2244 | 2744 | 3781 † |
| | 215.4 | 4.1 | 172 | 241 | 390 | 585 | 843 | 1273 | 1831 | 2202 | 2740 | 3981 † |
| | 238.4 | 3.8 | 168 | 265 | 374 | 593 | 861 | 1269 | 1904 | 2418 | 2570 | 3792 † |
| | 263.8 | 3.3 | 174 | 253 | 339 | 584 | 796 | 1272 | 1891 | 2471 | 2724 | 3812 † |
| | 291.9 | 3.0 | 164 | 242 | 390 | 594 | 862 | 1270 | 1900 | 2213 | 2748 | 3801 † |
| | 323.1 | 2.7 | 176 | 254 | 390 | 585 | 779 | 1274 | 1900 | 2207 | 2749 | 3520 † |
| | 357.5 | 2.5 | 176 | 241 | 375 | 586 | 797 | 1274 | 1700 | 2208 | 2739 | 3528 † |
| | 395.7 | 2.2 | 153 | 241 | 339 | 587 | 779 | 1273 | 1698 | 2208 | 2461 | 3537 † |
| | 437.9 | 2.0 | . . . | 242 | 342 | 501 | 779 | 1275 | 1719 | 2148 | 2463 | 3531 † |
| 720 | 105.9 | 6.8 | 166 | | | | | | | | | |
| | 117.2 | 6.1 | 172 | 241 | 335 | 569 | 853 | 1268 | 1895 | 2477 | 2554 | 3800 † |
| | 129.7 | 5.5 | 168 | 265 | 390 | 593 | 860 | 1263 | 1759 | 2416 | 2740 | 3970 † |
| | 143.6 | 5.0 | 174 | 253 | 384 | 604 | 842 | 1268 | 1815 | 2478 | 2729 | 3971 † |
| | 158.9 | 4.5 | 163 | 253 | 384 | 593 | 860 | 1268 | 1894 | 2410 | 2744 | 3979 † |
| | 175.9 | 4.1 | 177 | 253 | 335 | 584 | 797 | 1273 | 1829 | 2483 | 2735 | 3789 † |
| | 194.6 | 3.8 | 166 | 244 | 390 | 594 | 861 | 1270 | 1901 | 2266 | 2751 | 3799 † |
| | 215.4 | 3.3 | 172 | 242 | 391 | 584 | 844 | 1273 | 1830 | 2199 | 2756 | 3981 † |
| | 238.4 | 3.0 | 168 | 265 | 376 | 593 | 860 | 1269 | 1901 | 2407 | 2595 | 3799 † |
| | 263.8 | 2.7 | 174 | 253 | 341 | 585 | 797 | 1273 | 1901 | 2484 | 2731 | 3819 † |
| | 291.9 | 2.5 | 164 | 241 | 389 | 593 | 862 | 1270 | 1899 | 2206 | 2755 | 3815 † |
| | 323.1 | 2.2 | 176 | 253 | 391 | 585 | 778 | 1275 | 1901 | 2209 | 2754 | 3525 † |
| | 357.5 | 2.0 | 176 | 241 | 376 | 586 | 797 | 1274 | 1699 | 2209 | 2752 | 3533 † |
| | 395.7 | 1.8 | 153 | 242 | 340 | 587 | 779 | 1275 | 1699 | 2209 | 2462 | 3532 † |
| | 437.9 | 1.6 | . . . | 241 | 340 | 500 | 780 | 1272 | 1718 | 2148 | 2461 | 3540 † |
| 580 | 105.9 | 5.5 | 166 | | | | | | | | | |
| | 117.2 | 5.0 | 172 | 241 | 335 | 568 | 854 | 1272 | 1897 | 2476 | 2578 | 3800 † |
| | 129.7 | 4.5 | 168 | 265 | 389 | 593 | 861 | 1268 | 1757 | 2416 | 2748 | 3971 † |
| | 143.6 | 4.1 | 174 | 253 | 385 | 605 | 843 | 1271 | 1812 | 2477 | 2726 | 3978 † |
| | 158.9 | 3.8 | 164 | 254 | 384 | 594 | 861 | 1269 | 1905 | 2415 | 2746 | 3975 † |
| | 175.9 | 3.3 | 176 | 252 | 334 | 585 | 796 | 1272 | 1827 | 2481 | 2740 | 3800 † |
| | 194.6 | 3.0 | 166 | 244 | 390 | 594 | 861 | 1270 | 1901 | 2281 | 2759 | 3803 † |
| | 215.4 | 2.7 | 172 | 241 | 390 | 585 | 844 | 1273 | 1831 | 2207 | 2756 | 3981 † |
| | 238.4 | 2.5 | 168 | 264 | 374 | 594 | 862 | 1269 | 1901 | 2413 | 2612 | 3817 † |
| | 263.8 | 2.2 | 174 | 253 | 340 | 585 | 798 | 1272 | 1901 | 2478 | 2733 | 3821 † |
| | 291.9 | 2.0 | 164 | 242 | 389 | 595 | 861 | 1271 | 1901 | 2209 | 2751 | 3832 † |
| | 323.1 | 1.8 | 176 | 253 | 390 | 582 | 781 | 1275 | 1903 | 2209 | 2752 | 3543 † |
| | 357.5 | 1.6 | 176 | 242 | 374 | 586 | 799 | 1274 | 1699 | 2208 | 2751 | 3538 † |
| | 395.7 | 1.5 | 153 | 241 | 340 | 584 | 778 | 1272 | 1698 | 2208 | 2463 | 3542 † |
| | 437.9 | 1.3 | . . . | 242 | 340 | 500 | 777 | 1273 | 1715 | 2148 | 2465 | 3546 † |

† For the Size 555ARJ gear drive (hollow low speed shaft with shrink disc connection), the maximum output torque rating is limited to 3,100,000 lb-in by the shrink disc, and this shrink disc torque rating supersedes any higher torque ratings for the 555ARJ that may be shown on torque Pages 23, 25, 27, 29, 31 and 33. In those cases where your 555ARJ is selected at a High Speed Shaft rpm and Nominal Ratio where the torque rating of the gear drive is limited by the shrink disc (3,100,000 lb-in), you must calculate an Equivalent Power Rating (hp) for the 555ARJ gear drive using the formula below:

$$\frac{3{,}100{,}000 \text{ lb-in}}{\text{Torque Rating (lb-in) from Page 23, 25, 27, 29, 31 or 33}} \times \text{Power Rating (hp) from Page 22, 24, 26, 28, 30 or 32} = \text{Equivalent Power Rating (hp)}$$

| High Speed Shaft rpm | AVAILABILITY OF TYPES A / AR /AXV QUADRUPLE REDUCTION TYPE | 385 | 405 | 425 | 445 | 465 | 485 | 505 | 525 | 535 | 555 |
|---|---|---|---|---|---|---|---|---|---|---|---|
| All | A | X | X | X | X | X | X | X | X | . . . | . . . |
| | AR | . . . | X | X | X | X | X | X | . . . | X | X |
| | AXV | . . . | X | X | X | X | X | X | . . . | X | X |

© Rexnord Industries,LLC, 1998, 2009.

Type A

# Basic Thermal Horsepower Ratings ★/Single Reduction

| Nominal Ratios | High Speed Shaft rpm | Auxiliary Cooling | DRIVE SIZE 305 | 325 | 345 | 365 | 385 | 405 | 425 | 445 | 465 | 485 | 505 | 525 |
|---|---|---|---|---|---|---|---|---|---|---|---|---|---|---|
| 1.84 thru 3.05 Sizes 305 thru 525 | 1750 | None | 131 | 194 | 268 | 322 | | | | | | | | |
| | | 2 Shaft Fans | 262 | 420 | 563 | 763 | | | | | | | | |
| | | Cooling Tubes | 597 | 814 | 1137 | 1317 | 1357 | 1699 | 3069 | 3793 | 4715 | 6401 | 7112 | 7164 † |
| | 1430 | None | 136 | 200 | 275 | 341 | | | | | | | | |
| | | 2 Shaft Fans | 239 | 380 | 509 | 691 | | | | | | | | |
| | | Cooling Tubes | 556 | 757 | 1064 | 1246 | 1254 | 1594 | 2871 | 3569 | 4504 | 6137 | 6927 | 7191 † |
| | 1170 | None | 136 | 200 | 277 | 348 | | | | | | | | |
| | | 2 Shaft Fans | 217 | 344 | 463 | 627 | | | | | | | | |
| | | Cooling Tubes | 515 | 701 | 989 | 1166 | 1168 | 1501 | 2700 | 3398 | 4320 | 5927 | 6783 | 7230 |
| | 870 | None | 133 | 196 | 270 | 347 | | | | | | | | |
| | | 2 Shaft Fans | 192 | 299 | 405 | 547 | | | | | | | | |
| | | Cooling Tubes | 454 | 623 | 881 | 1047 | 1018 | 1317 | 2371 | 3016 | 3859 | 5334 | 6190 | 6717 |
| | 720 | None | 129 | 191 | 264 | 339 | | | | | | | | |
| | | 2 Shaft Fans | 177 | 275 | 373 | 503 | | | | | | | | |
| | | Cooling Tubes | 419 | 574 | 814 | 972 | 944 | 1226 | 2199 | 2818 | 3635 | 5044 | 5874 | 6466 |
| | 580 | None | 124 | 184 | 254 | 329 | | | | | | | | |
| | | 2 Shaft Fans | 163 | 250 | 340 | 459 | | | | | | | | |
| | | Cooling Tubes | 380 | 522 | 742 | 891 | 874 | 1136 | 2051 | 2632 | 3420 | 4765 | 5594 | 6234 |
| 3.38 thru 5.60 Sizes 305 thru 365 | 1750 | None | 108 | 150 | 196 | 250 | | | | | | | | |
| | | 2 Shaft Fans | 198 | 295 | 380 | 534 | | | | | | | | |
| | | Cooling Tubes | 394 | 515 | 701 | 847 | 1009 | 1212 | 1976 | 2450 | 3227 | 4478 | 5018 | 5874 † |
| | 1430 | None | 106 | 146 | 194 | 250 | | | | | | | | |
| | | 2 Shaft Fans | 177 | 262 | 339 | 476 | | | | | | | | |
| | | Cooling Tubes | 362 | 474 | 648 | 789 | 931 | 1122 | 1831 | 2278 | 3029 | 4214 | 4794 | 5742 † |
| | 1170 | None | 103 | 142 | 188 | 246 | | | | | | | | |
| | | 2 Shaft Fans | 159 | 235 | 304 | 426 | | | | | | | | |
| | | Cooling Tubes | 332 | 436 | 598 | 732 | 869 | 1051 | 1712 | 2134 | 2871 | 4004 | 4596 | 5637 |
| 3.38 thru 5.06 Sizes 385 thru 525 | 870 | None | 97.0 | 134 | 178 | 236 | | | | | | | | |
| | | 2 Shaft Fans | 137 | 200 | 262 | 365 | | | | | | | | |
| | | Cooling Tubes | 291 | 383 | 525 | 649 | 778 | 915 | 1488 | 1883 | 2542 | 3556 | 4109 | 5149 |
| | 720 | None | 93.0 | 128 | 171 | 228 | | | | | | | | |
| | | 2 Shaft Fans | 126 | 182 | 239 | 332 | | | | | | | | |
| | | Cooling Tubes | 266 | 350 | 483 | 601 | 734 | 847 | 1370 | 1752 | 2384 | 3332 | 3859 | 4912 |
| | 580 | None | 86.1 | 122 | 163 | 218 | | | | | | | | |
| | | 2 Shaft Fans | 111 | 164 | 216 | 300 | | | | | | | | |
| | | Cooling Tubes | 240 | 318 | 440 | 546 | 692 | 784 | 1272 | 1622 | 2221 | 3126 | 3625 | 4090 |

★ Basic thermal ratings in hp are shown for an ambient temperature of 80°F (27°C) and at an altitude of sea level to 2500 feet. For other ambient temperatures, other altitudes, or special air velocity / inlet water temperature / duty cycle considerations, use thermal factors on Page 10 to determine an application adjusted thermal rating which can then be compared to the actual power transmitted. Thermal ratings for cooling tubes are based on water inlet temperature of 70°F (21°C), and water flow rates as shown on Page 12. For cooling capacity exceeding the methods listed for the gear drive size, ratio, and high speed shaft rpm that you have selected, consult your Rexnord representative for an external heat exchanger package.

† Gear drives at 1750 rpm require jet lubrication and special labyrinth seals; gear drives at 1430 rpm require jet lubrication, refer to Factory.

For screened areas, no auxiliary cooling (None) and 2 shaft fans are not offered. Use electric fan or cooling tubes.

For basic thermal ratings with electric fan, see Page 35.

For cooling beyond the range of values listed, see oil to air cooler selections, Page 36.

## Basic Thermal Horsepower Rating with one shaft fan

Calculate thermal rating for gear drives with one shaft fan as follows: Average the thermal rating **without auxiliary cooling** and the thermal rating **with 2 shaft fans**.

**Example:** Size 425A2, 17.09:1 ratio at 1750 rpm
Thermal rating Without Auxiliary Cooling (Page 37) = 187
Thermal rating With 2 Shaft Fans (Page 37) = 449

$$\frac{187 + 449}{2} = 318 \text{ Thermal rating with one shaft fan}$$


© Rexnord Industries, LLC, 1998, 2009.

Type A

# Basic Electric Fan Thermal Ratings ★/Single Reduction

| High Speed Shaft rpm | Nominal Ratios ±3% | Approx. L.S. Shaft rpm | THERMAL RATING — HP | | | | | | | |
|---|---|---|---|---|---|---|---|---|---|---|
| | | | DRIVE SIZE | | | | | | | |
| | | | 385 | 405 | 425 | 445 | 465 | 485 | 505 | 525 |
| 1750 | 1.84 | 950 | 278 | 309 | NA | NA | NA | NA | NA | NA |
| | 2.03 | 860 | 299 | 350 | | | | | | |
| | 2.25 | 780 | 355 | 416 | 388 | | | | | |
| | 2.49 | 700 | 385 | 441 | 443 | 587 | | | | |
| | 2.76 | 640 | 381 | 463 | 532 | 853 | | | | |
| | 3.05 | 575 | 462 | 474 | 576 | 935 | 630 | | | |
| | 3.38 | 520 | 391 | 565 | 590 | 1053 | 780 | | | |
| | 3.74 | 470 | 441 | 544 | 604 | 1086 | 913 | | | |
| | 4.13 | 420 | 478 | 622 | 716 | 1107 | 1058 | 734 | | |
| | 4.57 | 380 | 462 | 592 | 705 | 1069 | 1293 | 854 | 947 | |
| | 5.06 | 350 | 313 | 646 | 686 | 1234 | 1307 | 951 | 1245 | |
| 1430 | 1.84 | 780 | 409 | 560 | 655 | 807 | NA | NA | NA | NA |
| | 2.03 | 700 | 412 | 562 | 718 | 940 | 771 | | | |
| | 2.25 | 640 | 469 | 591 | 738 | 998 | 911 | | | |
| | 2.49 | 575 | 473 | 588 | 751 | 1100 | 1111 | | | |
| | 2.76 | 520 | 449 | 587 | 761 | 1368 | 1211 | | | |
| | 3.05 | 470 | 526 | 573 | 783 | 1382 | 1342 | 820 | 810 | |
| | 3.38 | 420 | 438 | 663 | 749 | 1372 | 1385 | 1127 | 1035 | |
| | 3.74 | 380 | 350 | 616 | 732 | 1347 | 1389 | 1237 | 1358 | |
| | 4.13 | 350 | 395 | 684 | 821 | 1316 | 1393 | 1366 | 1571 | |
| | 4.57 | 310 | 390 | 477 | 787 | 1226 | 1643 | 1360 | 1665 | |
| | 5.06 | 280 | 382 | 540 | 550 | 1352 | 1584 | 1346 | 1875 | |
| 1170 | 1.84 | 640 | 477 | 702 | 937 | 1300 | 1540 | NA | NA | |
| | 2.03 | 575 | 468 | 677 | 954 | 1359 | 1648 | 911 | NA | |
| | 2.25 | 520 | 524 | 681 | 936 | 1365 | 1659 | 1205 | 1242 | |
| | 2.49 | 470 | 514 | 662 | 920 | 1385 | 1746 | 1300 | 1400 | |
| | 2.76 | 420 | 364 | 646 | 880 | 1643 | 1736 | 1469 | 1580 | 1552 |
| | 3.05 | 380 | 440 | 618 | 888 | 1614 | 1728 | 1512 | 1713 | 1723 |
| | 3.38 | 350 | 367 | 706 | 825 | 1527 | 1702 | 1711 | 1783 | 1887 |
| | 3.74 | 310 | 415 | 511 | 790 | 1468 | 1629 | 1733 | 2091 | 1967 |
| | 4.13 | 280 | 448 | 585 | 682 | 1408 | 1551 | 1705 | 2060 | 2360 |
| | 4.57 | 255 | 432 | 555 | 669 | 1290 | 1806 | 1623 | 2044 | 2348 |
| | 5.06 | 230 | 414 | 609 | 649 | 1269 | 1708 | 1542 | 2194 | 2634 |
| 870 | 1.84 | 470 | 426 | 786 | 1120 | 1633 | 2287 | 1771 | 2456 | 2185 |
| | 2.03 | 430 | 416 | 739 | 1100 | 1626 | 2241 | 1831 | 2085 | 2223 |
| | 2.25 | 390 | 466 | 596 | 1050 | 1589 | 2148 | 2105 | 2534 | 2825 |
| | 2.49 | 350 | 459 | 582 | 1013 | 1545 | 2139 | 2037 | 2505 | 2860 |
| | 2.76 | 320 | 427 | 570 | 767 | 1791 | 2048 | 2035 | 2515 | 2817 |
| | 3.05 | 290 | 499 | 549 | 780 | 1730 | 1939 | 1973 | 2333 | 2844 |
| | 3.38 | 260 | 408 | 632 | 729 | 1431 | 1864 | 2073 | 2266 | 2828 |
| | 3.74 | 235 | 448 | 580 | 702 | 1387 | 1737 | 2028 | 2546 | 2676 |
| | 4.13 | 210 | 471 | 641 | 782 | 1341 | 1478 | 1887 | 2330 | 2945 |
| | 4.57 | 190 | 447 | 595 | 744 | 1235 | 1756 | 1544 | 2238 | 2800 |
| | 5.06 | 175 | 422 | 640 | 702 | 1354 | 1667 | 1478 | 1961 | 3022 |
| 720 | 1.84 | 390 | 454 | 687 | 1151 | 1694 | 2451 | 2078 | 3000 | 2917 |
| | 2.03 | 350 | 440 | 648 | 945 | 1668 | 2359 | 2069 | 2456 | 2813 |
| | 2.25 | 320 | 489 | 640 | 906 | 1618 | 2235 | 2326 | 2867 | 3397 |
| | 2.49 | 290 | 474 | 616 | 881 | 1381 | 2200 | 2207 | 2776 | 3348 |
| | 2.76 | 260 | 435 | 596 | 825 | 1647 | 2086 | 2152 | 2730 | 3142 |
| | 3.05 | 235 | 506 | 566 | 830 | 1608 | 1788 | 2059 | 2454 | 3121 |
| | 3.38 | 210 | 410 | 648 | 762 | 1504 | 1736 | 2128 | 2347 | 3048 |
| | 3.74 | 190 | 447 | 587 | 725 | 1439 | 1632 | 1864 | 2612 | 2824 |
| | 4.13 | 175 | 467 | 643 | 795 | 1372 | 1537 | 1778 | 2026 | 3050 |
| | 4.57 | 155 | 440 | 592 | 750 | 1238 | 1804 | 1665 | 1972 | 2438 |
| | 5.06 | 140 | 413 | 635 | 701 | 1324 | 1682 | 1561 | 2089 | 2675 |
| 580 | 1.84 | 320 | 460 | 717 | 1027 | 1688 | 2481 | 2205 | 3248 | 3292 |
| | 2.03 | 290 | 442 | 669 | 1006 | 1513 | 2364 | 2154 | 2608 | 3099 |
| | 2.25 | 260 | 490 | 652 | 951 | 1477 | 2224 | 2396 | 2987 | 3658 |
| | 2.49 | 235 | 470 | 622 | 916 | 1441 | 2065 | 2248 | 2859 | 3558 |
| | 2.76 | 210 | 428 | 596 | 842 | 1700 | 1967 | 1993 | 2781 | 3256 |
| | 3.05 | 190 | 496 | 562 | 841 | 1644 | 1854 | 1919 | 2148 | 3208 |
| | 3.38 | 175 | 399 | 640 | 763 | 1495 | 1780 | 2022 | 2070 | 3100 |
| | 3.74 | 155 | 434 | 575 | 719 | 1409 | 1647 | 1975 | 2321 | 2498 |
| | 4.13 | 140 | 451 | 627 | 783 | 1326 | 1506 | 1821 | 2109 | 2736 |
| | 4.57 | 130 | 424 | 575 | 734 | 1191 | 1748 | 1669 | 2020 | 2592 |
| | 5.06 | 115 | 396 | 615 | 683 | 1274 | 1626 | 1535 | 2114 | 2798 |

★ Basis thermal capacities listed are for an ambient temperature of 80°F at an elevation from sea level to 2500 feet. Application adjusted thermal capacity must be determined by using the modification factors before comparing to the required load.

© Rexnord Industries,LLC, 1998, 2009.

# Type A
## 600PA Integrated Cooler Selections

**Oil-to-Air Coolers — Drive Mounted**

Max Ambient Temperature = 120°F  Min Service Factory = 1.25

Max Altitude = 10,000 ft

For input speeds below 1170 rpm, use 1170 rpm selection.

| Input RPM | Nominal Ratio | DRIVE SIZE | | | | | | | |
|---|---|---|---|---|---|---|---|---|---|
| | | 385 | 405 | 425 | 445 | 465 | 485 | 505 | 525 |
| 1750 | 1.84<br>2.03<br>2.25<br>2.49<br>2.76<br>3.05<br>3.38<br>3.74<br>4.13<br>4.57<br>5.06 | 605PA | | 601PA | 620PA | 630PA | 630PA | 640PA | NA |
| 1430 | 1.84<br>2.03<br>2.25<br>2.49<br>2.76<br>3.05<br>3.38<br>3.74<br>4.13<br>4.57<br>5.06 | | | | | 620PA | | | |
| 1170 | 1.84<br>2.03<br>2.25<br>2.49<br>2.76<br>3.05<br>3.38<br>3.74<br>4.13<br>4.57<br>5.06 | | | | | | 620PA | 630PA | |


© Rexnord Industries, LLC, 1998, 2009.

Type A, AR & AXV

# Basic Thermal Horsepower Ratings ★/Double Reduction

| Nominal Ratios | High Speed Shaft rpm | Auxiliary Cooling | DRIVE SIZE 305 | 325 | 345 | 365 | 385 | 405 | 425 | 445 | 465 | 485 | 505 | 525 | 535 | 545 | 555 | 565 | 585 |
|---|---|---|---|---|---|---|---|---|---|---|---|---|---|---|---|---|---|---|---|
| 6.20 thru 13.95 Sizes 305 thru 365 | 1750 | None ▲ | 54.7 | 87.0 | 110 | 161 | 153 | 179 | 233 | 290 | 358 | 405 | 436 | 465 | 495 | 544 | 578 | 597 | . . . |
| | | 2 Shaft Fans ● | 81.6 | 124 | 163 | 252 | 328 | 430 | 597 | 795 | 1086 | 1211 | 1463 † | 1792 | . . . | . . . | . . . | . . . | . . . |
| | | Electric Fan | 178 | 274 | 351 | 527 | 531 | 645 | 876 | 1193 | 1542 | 1872 | 3071 † | 4218 | . . . | 3466 | . . . | 3796 | . . . |
| | | Cooling Tubes | 153 | 225 | 294 | 375 | 487 | 594 | 1241 | 1554 | 1989 | 2976 | 3345 † | 3688 | . . . | 6466 | . . . | 7783 | . . . |
| | 1430 | None ▲ | 53.1 | 80.3 | 105 | 150 | 150 | 177 | 229 | 291 | 366 | 428 | 485 | 543 | 577 | 679 | 721 | 791 | . . . |
| | | 2 Shaft Fans ● | 74.2 | 110 | 148 | 223 | 287 | 376 | 522 | 696 | 950 | 1073 | 1310 † | 1608 | . . . | . . . | . . . | . . . | . . . |
| | | Electric Fan | 166 | 252 | 328 | 489 | 500 | 605 | 826 | 1127 | 1463 | 1792 | 2926 † | 4020 | . . . | 3387 | . . . | 3769 | . . . |
| | | Cooling Tubes | 145 | 211 | 270 | 363 | 446 | 548 | 1137 | 1422 | 1844 | 2766 | 3148 † | 3530 | . . . | 6071 | . . . | 7362 | . . . |
| | 1170 | None ▲ | 51.0 | 77.2 | 98.2 | 145 | 148 | 174 | 228 | 291 | 372 | 447 | 525 | 606 | 644 | 758 | 805 | 909 | 1160 |
| | | 2 Shaft Fans ● | 67.7 | 101 | 131 | 202 | 254 | 332 | 461 | 617 | 838 | 962 | 1181 † | 1450 | . . . | . . . | . . . | . . . | . . . |
| | | Electric Fan | 156 | 236 | 304 | 457 | 471 | 569 | 780 | 1064 | 1384 | 1713 | 2781 † | 3835 | . . . | 3295 | . . . | 3690 | 4150 |
| | | Cooling Tubes | 132 | 194 | 249 | 335 | 414 | 510 | 1052 | 1330 | 1725 | 2608 | 3003 † | 3411 | . . . | 5650 | . . . | 6901 | 7900 |
| 5.60 thru 10.29 Sizes 385 thru 585 | 870 | None ▲ | 47.6 | 72.2 | 92.4 | 131 | 136 | 162 | 214 | 275 | 360 | 438 | 521 | 616 | 655 | 812 | 863 | 995 | 1275 |
| | | 2 Shaft Fans ● | 59.6 | 88.8 | 117 | 171 | 215 | 278 | 384 | 514 | 701 | 815 | 1000 † | 1236 | . . . | . . . | . . . | . . . | . . . |
| | | Electric Fan | 141 | 215 | 277 | 411 | 431 | 522 | 717 | 981 | 1284 | 1608 | 2583 † | 3559 | . . . | 3124 | . . . | 3532 | 4020 |
| | | Cooling Tubes | 116 | 170 | 219 | 303 | 360 | 444 | 907 | 1154 | 1501 | 2305 | 2687 † | 3069 | . . . | 5044 | . . . | 6216 | 7178 |
| | 720 | None ▲ | 45.5 | 68.8 | 88.3 | 125 | 131 | 157 | 206 | 268 | 353 | 432 | 519 | 621 | 660 | 817 | 869 | 1011 | 1298 |
| | | 2 Shaft Fans ● | 55.1 | 82.4 | 108 | 159 | 195 | 250 | 344 | 463 | 631 | 741 | 909 † | 1127 | . . . | . . . | . . . | . . . | . . . |
| | | Electric Fan | 132 | 203 | 261 | 389 | 407 | 493 | 680 | 931 | 1226 | 1529 | 2465 † | 3400 | . . . | 3005 | . . . | 3414 | 3901 |
| | | Cooling Tubes | 106 | 155 | 202 | 279 | 332 | 410 | 835 | 1064 | 1396 | 2134 | 2515 † | 2884 | . . . | 4754 | . . . | 5847 | 6717 |
| | 580 | None ▲ | 44.2 | 65.2 | 83.8 | 119 | 125 | 152 | 199 | 261 | 348 | 428 | 518 | 626 | 665 | 815 | 867 | 1014 | 1291 |
| | | 2 Shaft Fans ● | 50.0 | 75.7 | 99.2 | 146 | 177 | 225 | 308 | 416 | 567 | 672 | 825 † | 1027 | . . . | . . . | . . . | . . . | . . . |
| | | Electric Fan | 123 | 188 | 245 | 364 | 383 | 463 | 639 | 877 | 1155 | 1450 | 2331 † | 3210 | . . . | 2876 | . . . | 3281 | 3741 |
| | | Cooling Tubes | 100 | 141 | 183 | 254 | 307 | 378 | 767 | 984 | 1293 | 1992 | 2356 † | 2715 | . . . | 4345 | . . . | 5371 | 6331 |
| 5.44 thru 34.74 Sizes 305 thru 365 | 1750 | None ▲ | 41.5 | 61.9 | 78.2 | 111 | 108 | 154 | 187 | 244 | 316 | 358 | 410 | 477 | 507 | 608 | 646 | 710 | . . . |
| | | 2 Shaft Fans ● | 60.1 | 87.1 | 115 | 170 | 223 | 355 | 449 | 623 | 870 | 948 | 1152 † | 1463 | . . . | . . . | . . . | . . . | . . . |
| | | Electric Fan | 126 | 188 | 243 | 349 | 402 | 526 | 655 | 937 | 1235 | 1437 | 2425 † | 3348 | . . . | 2768 | . . . | 3005 | . . . |
| | | Cooling Tubes | 79.5 | 115 | 148 | 180 | 304 | 444 | 809 | 1062 | 1409 | 2015 | 2305 † | 2700 | . . . | 4544 | . . . | 5334 | . . . |
| | 1430 | None ▲ | 39.4 | 58.7 | 74.3 | 101 | 105 | 149 | 181 | 236 | 308 | 357 | 414 | 497 | 528 | 648 | 688 | 768 | . . . |
| | | 2 Shaft Fans ● | 53.9 | 78.4 | 104 | 149 | 194 | 307 | 390 | 540 | 751 | 826 | 1006 † | 1289 | . . . | . . . | . . . | . . . | . . . |
| | | Electric Fan | 117 | 175 | 224 | 322 | 377 | 492 | 613 | 880 | 1160 | 1358 | 2293 † | 3163 | . . . | 2662 | . . . | 2900 | . . . |
| | | Cooling Tubes | 72.8 | 105 | 136 | 180 | 275 | 407 | 734 | 973 | 1288 | 1870 | 2147 † | 2529 | . . . | 4214 | . . . | 4978 | . . . |
| | 1170 | None ▲ | 37.0 | 55.1 | 70.2 | 96.5 | 101 | 144 | 175 | 229 | 301 | 356 | 416 | 513 | 545 | 658 | 699 | 786 | 1120 |
| | | 2 Shaft Fans ● | 48.6 | 70.8 | 93.2 | 133 | 170 | 270 | 341 | 472 | 654 | 728 | 887 † | 1143 | . . . | . . . | . . . | . . . | . . . |
| | | Electric Fan | 109 | 162 | 210 | 299 | 353 | 461 | 576 | 828 | 1094 | 1288 | 2162 † | 2979 | . . . | 2544 | . . . | 2781 | 3640 |
| | | Cooling Tubes | 67.7 | 98.5 | 127 | 167 | 253 | 377 | 674 | 902 | 1187 | 1752 | 2028 † | 2410 | . . . | 4017 | . . . | 4754 | 5840 |
| 11.39 thru 20.93 Sizes 385 thru 585 | 870 | None ▲ | 34.0 | 50.6 | 64.8 | 88.8 | 92.9 | 133 | 161 | 214 | 286 | 337 | 399 | 498 | 529 | 662 | 703 | 796 | 1112 |
| | | 2 Shaft Fans ● | 42.2 | 61.8 | 81.2 | 115 | 144 | 225 | 281 | 390 | 543 | 609 | 742 † | 961 | . . . | . . . | . . . | . . . | . . . |
| | | Electric Fan | 99.0 | 146 | 188 | 270 | 323 | 420 | 525 | 758 | 1006 | 1190 | 1990 † | 2755 | . . . | 2372 | . . . | 2610 | 3255 |
| | | Cooling Tubes | 59.5 | 86.9 | 112 | 149 | 223 | 335 | 598 | 790 | 1031 | 1515 | 1765 † | 2120 | . . . | 3556 | . . . | 4228 | 5439 |
| | 720 | None ▲ | 32.2 | 47.8 | 61.6 | 84.4 | 88.3 | 128 | 153 | 204 | 277 | 327 | 390 | 490 | 521 | 646 | 687 | 779 | 1102 |
| | | 2 Shaft Fans ● | 38.9 | 56.9 | 74.7 | 106 | 130 | 203 | 250 | 348 | 486 | 550 | 668 † | 869 | . . . | . . . | . . . | . . . | . . . |
| | | Electric Fan | 92.0 | 138 | 178 | 254 | 303 | 397 | 496 | 717 | 954 | 1130 | 1898 † | 2610 | . . . | 2267 | . . . | 2504 | 3137 |
| | | Cooling Tubes | 54.8 | 80.1 | 104 | 138 | 208 | 312 | 560 | 735 | 952 | 1396 | 1646 † | 1989 | . . . | 3398 | . . . | 4070 | 5057 |
| | 580 | None ▲ | 30.1 | 44.9 | 57.8 | 79.4 | 84.2 | 123 | 146 | 197 | 270 | 318 | 382 | 484 | 515 | 632 | 671 | 765 | 1065 |
| | | 2 Shaft Fans ● | 35.3 | 52.0 | 68.2 | 96.2 | 118 | 183 | 223 | 311 | 435 | 494 | 601 † | 784 | . . . | . . . | . . . | . . . | . . . |
| | | Electric Fan | 85.9 | 128 | 166 | 236 | 285 | 372 | 464 | 673 | 898 | 1065 | 1784 † | 2452 | . . . | 2150 | . . . | 2381 | 2981 |
| | | Cooling Tubes | 50.8 | 73.0 | 94.7 | 127 | 193 | 293 | 524 | 683 | 880 | 1285 | 1516 † | 1851 | . . . | 3091 | . . . | 3712 | 4849 |

★ Basic thermal ratings in hp are shown for an ambient temperature of 80°F (27°C) and at an altitude of sea level to 2500 feet. For other ambient temperatures, other altitudes, or special air velocity / inlet water temperature / duty cycle considerations, use thermal factors on Page 10 to determine an application adjusted thermal rating which can then be compared to the actual power transmitted. Thermal ratings for cooling tubes are based on water inlet temperature of 70°F (21°C), and water flow rates as shown on Page 12. For cooling capacity exceeding the methods listed for the gear drive size, ratio, and high speed shaft rpm that you have selected, consult your Rexnord representative for an external heat exchanger package.

▲ For Type AXV, apply a multiplier of 0.8 to thermal ratings with no auxiliary cooling.

● Type A gear drives with backstop at high speed shaft are only available with one shaft fan. See instructions on Page 34 to calculate thermal rating with one shaft fan. Type AR gear drives are only available with one shaft fan. See instructions on Page 34 to calculate thermal rating with one shaft fan. Type AXV gear drives are not available with shaft fans.

† Size 505 ratings for Shaft Fans, Electric Fans, and Cooling Tubes apply only to Type A. Consult Falk for Type AR and AXV ratings.

© Rexnord Industries,LLC, 1998, 2009.

Type A, AR & AXV

# Basic Thermal Horsepower Ratings ★/Triple Reduction

| Nominal Ratios | High Speed Shaft rpm | Auxiliary Cooling | DRIVE SIZE 305 | 325 | 345 | 365 | 385 | 405 | 425 | 445 | 465 | 485 | 505 | 525 | 535 | 545 | 555 | 565 | 585 |
|---|---|---|---|---|---|---|---|---|---|---|---|---|---|---|---|---|---|---|---|
| 38.44 thru 86.50 Sizes 305 thru 365 | 1750 | None ▲ | 26.2 | 37.7 | 49.3 | 67.0 | 89.4 | 109 | 134 | 177 | 231 | 286 | 345 | 415 | 442 | 540 | 574 | 623 | 838 |
| | | 2 Shaft Fans ● | . . . | . . . | . . . | . . . | 133 | 177 | 214 | 298 | 414 | 554 | 672 † | 812 | . . . | 1318 | . . . | 1503 | 1885 |
| | | Electric Fan | 78.9 | 114 | 152 | 208 | 275 | 347 | 452 | 631 | 837 | 1075 | 1977 † | 2399 | . . . | 1964 | . . . | 2175 | 2451 |
| | | Cooling Tubes | . . . | . . . | . . . | . . . | 242 | 303 | 558 | 728 | 951 | 1475 | 1699 † | 1976 | . . . | 3767 | . . . | 4675 | 5387 |
| | 1430 | None ▲ | 24.8 | 35.6 | 46.9 | 63.0 | 83.2 | 100 | 126 | 166 | 220 | 279 | 340 | 410 | 436 | 546 | 580 | 651 | 863 |
| | | 2 Shaft Fans ● | . . . | . . . | . . . | . . . | 118 | 156 | 190 | 264 | 365 | 492 | 597 † | 726 | . . . | 1169 | . . . | 1344 | 1700 |
| | | Electric Fan | 73.0 | 106 | 141 | 192 | 256 | 323 | 418 | 584 | 784 | 1011 | 1858 † | 2254 | . . . | 1872 | . . . | 2082 | 2359 |
| | | Cooling Tubes | . . . | . . . | . . . | . . . | 227 | 286 | 523 | 682 | 890 | 1343 | 1567 † | 1831 | . . . | 3477 | . . . | 4359 | 5044 |
| | 1170 | None ▲ | 23.3 | 33.5 | 44.4 | 59.2 | 78.3 | 93.3 | 120 | 159 | 211 | 274 | 335 | 405 | 431 | 542 | 576 | 659 | 869 |
| | | 2 Shaft Fans ● | . . . | . . . | . . . | . . . | 106 | 137 | 170 | 236 | 327 | 442 | 535 † | 656 | . . . | 1041 | . . . | 1217 | 1542 |
| | | Electric Fan | 67.7 | 98.2 | 131 | 179 | 237 | 302 | 393 | 550 | 730 | 952 | 1740 † | 2122 | . . . | 1779 | . . . | 1990 | 2267 |
| | | Cooling Tubes | . . . | . . . | . . . | . . . | 215 | 271 | 494 | 644 | 842 | 1246 | 1462 † | 1712 | . . . | 3200 | . . . | 4043 | 4689 |
| 23.16 thru 47.08 Sizes 385 thru 585 | 870 | None ▲ | 21.2 | 30.7 | 40.7 | 54.0 | 71.8 | 86.9 | 109 | 145 | 194 | 249 | 307 | 378 | 402 | 507 | 539 | 650 | 851 |
| | | 2 Shaft Fans ● | . . . | . . . | . . . | . . . | 91.6 | 118 | 146 | 202 | 278 | 372 | 453 † | 561 | . . . | 871 | . . . | 1054 | 1344 |
| | | Electric Fan | 61.0 | 88.0 | 118 | 161 | 216 | 273 | 353 | 501 | 667 | 866 | 1582 † | 1924 | . . . | 1634 | . . . | 1858 | 2122 |
| | | Cooling Tubes | . . . | . . . | . . . | . . . | 184 | 234 | 439 | 572 | 749 | 1144 | 1330 † | 1528 | . . . | 2950 | . . . | 3582 | 4188 |
| | 720 | None ▲ | 20.0 | 28.9 | 38.4 | 50.5 | 68.7 | 83.7 | 105 | 138 | 185 | 236 | 294 | 364 | 388 | 497 | 529 | 625 | 817 |
| | | 2 Shaft Fans ● | . . . | . . . | . . . | . . . | 84.6 | 109 | 134 | 185 | 254 | 336 | 414 † | 513 | . . . | 795 | . . . | 954 | 1217 |
| | | Electric Fan | 56.8 | 82.8 | 110 | 150 | 203 | 257 | 333 | 468 | 623 | 820 | 1489 † | 1832 | . . . | 1555 | . . . | 1766 | 2017 |
| | | Cooling Tubes | . . . | . . . | . . . | . . . | 170 | 216 | 410 | 536 | 703 | 1100 | 1256 † | 1 436 | . . . | 2726 | . . . | 3424 | 4030 |
| | 580 | None ▲ | 18.7 | 27.0 | 36.0 | 47.3 | 65.6 | 80.7 | 100 | 132 | 177 | 225 | 281 | 352 | 374 | 481 | 511 | 608 | 793 |
| | | 2 Shaft Fans ● | . . . | . . . | . . . | . . . | 78.1 | 100 | 123 | 168 | 231 | 304 | 376 † | 468 | . . . | 718 | . . . | 869 | 1112 |
| | | Electric Fan | 52.8 | 76.9 | 103 | 139 | 190 | 241 | 314 | 440 | 586 | 763 | 1390 † | 1717 | . . . | 1475 | . . . | 1676 | 1921 |
| | | Cooling Tubes | . . . | . . . | . . . | . . . | 155 | 198 | 383 | 502 | 660 | 1050 | 1193 † | 1350 | . . . | 2472 | . . . | 3123 | 3689 |
| 95.73 thru 215.4 Sizes 305 thru 365 | 1750 | None ▲ | 20.6 | 28.3 | 38.0 | 50.3 | 67.0 | 80.5 | 106 | 138 | 186 | 223 | 274 | 349 | 371 | 476 | 505 | 560 | 739 |
| | | 2 Shaft Fans ● | . . . | . . . | . . . | . . . | 100 | 131 | 166 | 228 | 323 | 415 | 511 † | 645 | . . . | 1085 | . . . | 1243 | 1542 |
| | | Electric Fan | 60.4 | 83.0 | 113 | 154 | 212 | 269 | 347 | 503 | 654 | 847 | 1503 † | 1858 | . . . | 1595 | . . . | 1766 | 1977 |
| | | Cooling Tubes | . . . | . . . | . . . | . . . | 180 | 223 | 408 | 531 | 698 | 1038 | 1193 † | 1383 | . . . | 2779 | . . . | 3516 | 3951 |
| | 1430 | None ▲ | 19.2 | 26.5 | 35.7 | 47.2 | 63.5 | 76.4 | 98.2 | 130 | 174 | 214 | 262 | 327 | 347 | 443 | 471 | 560 | 731 |
| | | 2 Shaft Fans ● | . . . | . . . | . . . | . . . | 89.4 | 117 | 146 | 202 | 283 | 366 | 449 † | 561 | . . . | 929 | . . . | 1104 | 1371 |
| | | Electric Fan | 55.8 | 76.7 | 105 | 142 | 198 | 250 | 319 | 464 | 608 | 793 | 1410 † | 1727 | . . . | 1476 | . . . | 1674 | 1872 |
| | | Cooling Tubes | . . . | . . . | . . . | . . . | 163 | 204 | 387 | 498 | 655 | 946 | 1112 † | 1317 | . . . | 2660 | . . . | 3253 | 3674 |
| | 1170 | None ▲ | 17.9 | 24.6 | 33.2 | 43.9 | 60.8 | 73.1 | 92.0 | 122 | 163 | 206 | 253 | 308 | 328 | 435 | 462 | 540 | 701 |
| | | 2 Shaft Fans ● | . . . | . . . | . . . | . . . | 80.9 | 105 | 131 | 179 | 252 | 327 | 399 † | 494 | . . . | 825 | . . . | 975 | 1217 |
| | | Electric Fan | 51.5 | 70.9 | 97.0 | 131 | 185 | 233 | 299 | 435 | 564 | 742 | 1315 † | 1608 | . . . | 1397 | . . . | 1582 | 1766 |
| | | Cooling Tubes | . . . | . . . | . . . | . . . | 148 | 190 | 369 | 470 | 620 | 872 | 1047 † | 1264 | . . . | 2436 | . . . | 3095 | 3516 |
| 52.11 thru 105.9 Sizes 385 thru 585 | 870 | None ▲ | 16.2 | 22.3 | 30.3 | 39.9 | 55.1 | 67.2 | 84.6 | 112 | 150 | 188 | 231 | 286 | 303 | 401 | 426 | 523 | 673 |
| | | 2 Shaft Fans ● | . . . | . . . | . . . | . . . | 69.7 | 90.4 | 113 | 154 | 215 | 275 | 339 † | 420 | . . . | 684 | . . . | 838 | 1046 |
| | | Electric Fan | 46.1 | 63.5 | 87.1 | 118 | 166 | 212 | 270 | 395 | 514 | 671 | 1189 † | 1463 | . . . | 1275 | . . . | 1463 | 1648 |
| | | Cooling Tubes | . . . | . . . | . . . | . . . | 127 | 165 | 313 | 403 | 533 | 774 | 932 † | 1123 | . . . | 2265 | . . . | 2739 | 3121 |
| | 720 | None ▲ | 15.3 | 20.8 | 28.5 | 37.2 | 52.2 | 64.3 | 81.1 | 108 | 145 | 179 | 220 | 274 | 292 | 391 | 416 | 498 | 639 |
| | | 2 Shaft Fans ● | . . . | . . . | . . . | . . . | 64.1 | 83.0 | 103 | 141 | 196 | 249 | 308 † | 384 | . . . | 622 | . . . | 754 | 945 |
| | | Electric Fan | 43.1 | 59.3 | 81.5 | 110 | 156 | 199 | 254 | 373 | 484 | 634 | 1122 † | 1384 | . . . | 1213 | . . . | 1384 | 1555 |
| | | Cooling Tubes | . . . | . . . | . . . | . . . | 117 | 150 | 286 | 369 | 490 | 726 | 874 † | 1054 | . . . | 2081 | . . . | 2621 | 3016 |
| | 580 | None ▲ | 14.2 | 19.5 | 26.6 | 34.7 | 49.5 | 61.6 | 77.6 | 103 | 139 | 171 | 210 | 264 | 281 | 378 | 401 | 481 | 616 |
| | | 2 Shaft Fans ● | . . . | . . . | . . . | . . . | 58.9 | 76.1 | 95.1 | 130 | 180 | 226 | 280 † | 349 | . . . | 561 | . . . | 684 | 859 |
| | | Electric Fan | 39.9 | 55.1 | 75.6 | 102 | 146 | 186 | 239 | 348 | 453 | 593 | 1049 † | 1295 | . . . | 1145 | . . . | 1312 | 1474 |
| | | Cooling Tubes | . . . | . . . | . . . | . . . | 107 | 138 | 260 | 337 | 449 | 680 | 820 † | 988 | . . . | 1881 | . . . | 2385 | 2747 |

★ Basic thermal ratings in hp are shown for an ambient temperature of 80°F (27°C) and at an altitude of sea level to 2500 feet. For other ambient temperatures, other altitudes, or special air velocity / inlet water temperature / duty cycle considerations, use thermal factors on Page 10 to determine an application adjusted thermal rating which can then be compared to the actual power transmitted. Thermal ratings for cooling tubes are based on water inlet temperature of 70°F (21°C), and water flow rates as shown on Page 12. For cooling capacity exceeding the methods listed for the gear drive size, ratio, and high speed shaft rpm that you have selected, consult your Rexnord representative for an external heat exchanger package.

▲ For Type AXV, apply a multiplier of 0.8 to thermal ratings with no auxiliary cooling.

● Type A gear drives with backstop at high speed shaft are only available with one shaft fan. See instructions on Page 34 to calculate thermal rating with one shaft fan. Type AR gear drives are only available with one shaft fan. See instructions on Page 34 to calculate thermal rating with one shaft fan. Type AXV gear drives are not available with shaft fans.

† Size 505 ratings for Shaft Fans, Electric Fans, and Cooling Tubes apply only to Type A. Consult Falk for Type AR and AXV ratings.


© Rexnord Industries, LLC, 1998, 2009.

Type A, AR & AXV

# Basic Thermal Horsepower Ratings ★/Quadruple Reduction

| Nominal Ratios | High Speed Shaft rpm | Auxiliary Cooling | DRIVE SIZE 385 | 405 | 425 | 445 | 465 | 485 | 505 | 525 | 535 | 555 |
|---|---|---|---|---|---|---|---|---|---|---|---|---|
| 117.2 thru 215.4 | 1750 | None ▲ | 46.7 | 57.6 | 75.0 | 94.6 | 130 | 156 | 192 | 236 | 251 | 317 |
| | | 2 Shaft Fans ● | ... | ... | ... | 127 | 165 | 217 | 289 † | 386 | ... | ... |
| | | Electric Fan | 148 | 187 | 248 | 341 | 448 | 576 | 1021 † | 1314 | ... | ... |
| | | Cooling Tubes | ... | ... | ... | 274 | 360 | 462 | 576 † | 711 | ... | ... |
| | 1430 | None ▲ | 44.3 | 54.7 | 71 7 | 91 9 | 124 | 153 | 190 | 237 | 252 | 319 |
| | | 2 Shaft Fans ● | ... | ... | ... | 117 | 152 | 202 | 268 † | 356 | ... | ... |
| | | Electric Fan | 137 | 175 | 231 | 318 | 419 | 540 | 956 † | 1231 | ... | ... |
| | | Cooling Tubes | ... | ... | ... | 252 | 328 | 425 | 531 † | 661 | ... | ... |
| | 1170 | None ▲ | 42.4 | 52.3 | 68.9 | 89.5 | 120 | 150 | 188 | 239 | 253 | 320 |
| | | 2 Shaft Fans ● | ... | ... | ... | 109 | 141 | 188 | 252 † | 332 | ... | ... |
| | | Electric Fan | 128 | 162 | 216 | 298 | 391 | 507 | 895 † | 1152 | ... | ... |
| | | Cooling Tubes | ... | ... | ... | 232 | 303 | 395 | 494 † | 620 | ... | ... |
| | 870 | None ▲ | 38.5 | 47.8 | 63.0 | 82.6 | 110 | 140 | 177 | 224 | 238 | 302 |
| | | 2 Shaft Fans ● | ... | ... | ... | 97.0 | 125 | 167 | 223 † | 293 | ... | ... |
| | | Electric Fan | 116 | 146 | 195 | 270 | 355 | 463 | 815 † | 1046 | ... | ... |
| | | Cooling Tubes | ... | ... | ... | 202 | 262 | 344 | 432 † | 544 | ... | ... |
| | 720 | None ▲ | 36.6 | 45.6 | 60.1 | 79.1 | 105 | 134 | 171 | 217 | 232 | 293 |
| | | 2 Shaft Fans ● | ... | ... | ... | 90.8 | 117 | 157 | 207 † | 273 | ... | ... |
| | | Electric Fan | 109 | 138 | 183 | 253 | 333 | 436 | 767 † | 986 | ... | ... |
| | | Cooling Tubes | ... | ... | ... | 184 | 241 | 317 | 402 † | 506 | ... | ... |
| | 580 | None ▲ | 35.4 | 43.5 | 57.4 | 75.9 | 99.9 | 129 | 166 | 212 | 225 | 284 |
| | | 2 Shaft Fans ● | ... | ... | ... | 84.9 | 110 | 147 | 193 † | 254 | ... | ... |
| | | Electric Fan | 102 | 128 | 171 | 236 | 311 | 408 | 715 † | 921 | ... | ... |
| | | Cooling Tubes | ... | ... | ... | 170 | 222 | 294 | 373 † | 470 | ... | ... |
| 238.4 thru 437.9 | 1750 | None ▲ | 38.6 | 47.4 | 61.8 | 79.1 | 112 | 140 | 174 | 215 | 228 | 288 |
| | | 2 Shaft Fans ● | ... | ... | ... | 105 | 141 | 190 | 254 † | 337 | ... | ... |
| | | Electric Fan | 117 | 149 | 196 | 286 | 370 | 481 | 847 † | 1104 | ... | ... |
| | | Cooling Tubes | ... | ... | ... | 213 | 287 | 369 | 469 † | 570 | ... | ... |
| | 1430 | None ▲ | 36.1 | 44.4 | 58.4 | 75.9 | 106 | 134 | 169 | 210 | 223 | 282 |
| | | 2 Shaft Fans ● | ... | ... | ... | 96.0 | 129 | 173 | 233 † | 306 | ... | ... |
| | | Electric Fan | 109 | 138 | 182 | 265 | 345 | 449 | 789 † | 1031 | ... | ... |
| | | Cooling Tubes | ... | ... | ... | 195 | 261 | 337 | 432 † | 528 | ... | ... |
| | 1170 | None ▲ | 34.1 | 42.0 | 55.6 | 73.4 | 101 | 130 | 165 | 207 | 219 | 278 |
| | | 2 Shaft Fans ● | ... | ... | ... | 89.4 | 119 | 161 | 216 † | 282 | ... | ... |
| | | Electric Fan | 101 | 128 | 170 | 248 | 322 | 420 | 737 † | 961 | ... | ... |
| | | Cooling Tubes | ... | ... | ... | 180 | 240 | 312 | 400 † | 493 | ... | ... |
| | 870 | None ▲ | 30.6 | 38.0 | 50.5 | 67.2 | 91.7 | 119 | 152 | 191 | 203 | 257 |
| | | 2 Shaft Fans ● | ... | ... | ... | 78.8 | 105 | 140 | 190 † | 246 | ... | ... |
| | | Electric Fan | 91.0 | 116 | 153 | 223 | 291 | 381 | 666 † | 871 | ... | ... |
| | | Cooling Tubes | ... | ... | ... | 155 | 207 | 270 | 348 † | 432 | ... | ... |
| | 720 | None ▲ | 29.0 | 35.8 | 47.8 | 64.1 | 87.0 | 113 | 146 | 183 | 195 | 247 |
| | | 2 Shaft Fans ● | ... | ... | ... | 73.5 | 97.7 | 130 | 177 † | 228 | ... | ... |
| | | Electric Fan | 85.0 | 109 | 144 | 210 | 273 | 358 | 625 † | 817 | ... | ... |
| | | Cooling Tubes | ... | ... | ... | 142 | 190 | 249 | 321 † | 400 | ... | ... |
| | 580 | None ▲ | 27.4 | 34.0 | 45.4 | 61.2 | 82.7 | 108 | 140 | 177 | 188 | 238 |
| | | 2 Shaft Fans ● | ... | ... | ... | 68.7 | 90.9 | 121 | 164 † | 212 | ... | ... |
| | | Electric Fan | 79.2 | 101 | 133 | 195 | 254 | 335 | 581 † | 763 | ... | ... |
| | | Cooling Tubes | ... | ... | ... | 130 | 174 | 230 | 296 † | 371 | ... | ... |

★ Basic thermal ratings in hp are shown for an ambient temperature of 80°F (27°C) and at an altitude of sea level to 2500 feet. For other ambient temperatures, other altitudes, or special air velocity / inlet water temperature / duty cycle considerations, use thermal factors on Page 10 to determine an application adjusted thermal rating which can then be compared to the actual power transmitted. Thermal ratings for cooling tubes are based on water inlet temperature of 70°F (21°C), and water flow rates as shown on Page 12. For cooling capacity exceeding the methods listed for the gear drive size, ratio, and high speed shaft rpm that you have selected, consult your Rexnord representative for an external heat exchanger package.

▲ For Type AXV, apply a multiplier of 0.8 to thermal ratings with no auxiliary cooling.

● Type A gear drives with backstop at high speed shaft are only available with one shaft fan. See instructions on Page 34 to calculate thermal rating with one shaft fan. Type AR gear drives are only available with one shaft fan. See instructions on Page 34 to calculate thermal rating with one shaft fan. Type AXV gear drives are not available with shaft fans.

† Size 505 ratings for Shaft Fans, Electric Fans, and Cooling Tubes apply only to Type A. Consult Falk for Type AR and AXV ratings.

© Rexnord Industries,LLC, 1998, 2009.

# Type A, AR & AXV Overhung Loads

## High & Low Speed Shaft

$$\text{Overhung Load (lb)} = \frac{126{,}000 \times hp \times F_c \times L_f}{\text{Pitch Dia (in)} \times rpm}$$

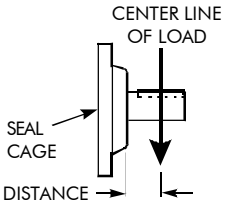


**$F_c$ = Load Connection Factor.**

Sprocket★ . . . . . 1.00
Machined Pinion & Gear ★. . . 1.25
Synchronous (Timing) Belt . . . . 1.30
V–Belt . . . . . 1.50
Flat Belt . . . . . 2.50

**$L_f$ = Load Location Factor.**

Low Speed Shaft – See table below.
High Speed Shaft – See instructions at right.

★ Refer all multiple chain sprocket and pinion mounted applications to the Factory for deflection analysis.

**Overhung Loads —** Overhung load is imposed upon a shaft when a pinion, sprocket or sheave is used as a power take-off. The magnitude of the load varies with the type of take-off and its proximity to the shaft bearing. Calculate the load (including minimum required service factor) and check the result against the tabulated overhung load rating. The above overhung load formula considers the transmitted power rating, without service factor. This is appropriate for applications where starting loads, momentary overloads and brake capacities do not exceed 200% of drive rating (100% overload). For other conditions, compute the equivalent power by multiplying the transmitted power by the appropriate service factor.

**Locate the center line of the load** as close to the gear drive seal cage as practical to minimize the effect of the overhung load and increase bearing life.

**Consult Factory for Higher Overhung Load Ratings** — In many cases, overhung load capacity in excess of that published is available. If the actual load should exceed the published capacity, refer full details to the Factory; provide complete application information (see Page 9), as well as direction of rotation, location and direction of applied load.

### LOW SPEED SHAFT

Calculate low speed shaft overhung load using the formula and $F_c$ values at left. The $L_f$ load location factors tabulated below are based on the distance from the center line of the load to the gear drive seal cage.

**Low speed shaft overhung load example** – An application requiring 115 hp is driven by a 385A2 drive with 100 rpm output. An 18" pitch diameter single-chain sprocket is mounted on the low speed shaft and the center line of the load is 5 inches from the seal cage. Calculate the overhung load:

$$\text{Overhung Load} = \frac{126{,}000 \times 115 \times 1.0 \times 1.05}{18 \times 100} = 8453 \text{ pounds}$$

Refer to the Type A2 table on Page 44 and note that the overhung load capacity for a 385A2 at 100 rpm is 12,500 pounds (12.5 x 1000) and is satisfactory for this selection.

### HIGH SPEED SHAFT

High speed shaft overhung load ratings published on Pages 41 thru 45 are for normal conditions where the center line of the load is one shaft diameter from the seal cage, and for speeds of 1170 rpm or lower. Where the center line of the load is one shaft diameter or closer, calculate the high speed shaft overhung load using $L_f$ = 1 in the formula above left. Check the result against the rating on Pages 41 thru 45. Higher overhung load capacities are available when the full gear drive torque rating is not utilized. Refer to the Factory for higher ratings for these conditions, or if the calculated load (using $L_f$ =1) exceeds the published value, or if the load is applied at a distance greater than one shaft diameter from the high speed shaft seal cage.

## Type A, AR & AXV

### $L_f$ Load Location Factors *

### Low Speed Shaft

Based on distance from center line of load to gear drive seal cage.

| Distance (in) | SINGLE REDUCTION | | | | | | | | | | | | DOUBLE, TRIPLE & QUADRUPLE REDUCTIONS | | | | | | | | | | | | | | | | |
|---|---|---|---|---|---|---|---|---|---|---|---|---|---|---|---|---|---|---|---|---|---|---|---|---|---|---|---|---|---|
| | DRIVE SIZE | | | | | | | | | | | | DRIVE SIZE | | | | | | | | | | | | | | | | |
| | 305 | 325 | 345 | 365 | 385 | 405 | 425 | 445 | 465 | 485 | 505 | 525 | 305 | 325 | 345 | 365 | 385 | 405 | 425 | 445 | 465 | 485 | 505 | 525 | 535 | 545 | 555 | 565 | 585 |
| 2 | .94 | .93 | .90 | .89 | .89 | .87 | .86 | .86 | .85 | .81 | .81 | .80 | .94 | .92 | .90 | .88 | .87 | .86 | .84 | .83 | .82 | .81 | .81 | .80 | .77 | .80 | .81 | .81 | .81 |
| 2.5 | .98 | .96 | .93 | .91 | .91 | .90 | .88 | .87 | .86 | .83 | .82 | .81 | .98 | .96 | .93 | .91 | .90 | .88 | .86 | .85 | .84 | .83 | .82 | .81 | .79 | .81 | .82 | .82 | .82 |
| 3 | 1.04 | 1.00 | .94 | .94 | 93 | .92 | .90 | .89 | .87 | .84 | .84 | .82 | 1.02 | 1.00 | .96 | .94 | .92 | .91 | .88 | .87 | .86 | .84 | .84 | .82 | .80 | .82 | .83 | .83 | .83 |
| 3.5 | 1.12 | 1.08 | .97 | .97 | .96 | .94 | .91 | .90 | .89 | .86 | .85 | .83 | 1.06 | 1.04 | 1.00 | .97 | .95 | .93 | .91 | .89 | .87 | .86 | .85 | .83 | .81 | .83 | .84 | .84 | .84 |
| 4 | 1.20 | 1.15 | 1.00 | 1.00 | .98 | .96 | .93 | .92 | .90 | .87 | .86 | .85 | 1.10 | 1.08 | 1.03 | 1.00 | .97 | .95 | .93 | .91 | .89 | .87 | .86 | .85 | .83 | .84 | .85 | .84 | .85 |
| 4.5 | . . . | 1.23 | 1.07 | 1.06 | 1.00 | .98 | .95 | .94 | .92 | .88 | .88 | .86 | . . . | 1.11 | 1.06 | 1.03 | 1.00 | .98 | .95 | .92 | .91 | .88 | .88 | .86 | .84 | .83 | .86 | .85 | .86 |
| 5 | . . . | . . . | 1.13 | 1.13 | 1.05 | 1.00 | .97 | .95 | .93 | .90 | .89 | .87 | . . . | . . . | 1.10 | 1.06 | 1.05 | 1.00 | .97 | .94 | .92 | .90 | .89 | .87 | .85 | .86 | .87 | .86 | .87 |
| 5.5 | . . . | . . . | 1.20 | 1.19 | 1.11 | 1.05 | .99 | .97 | .95 | .91 | .90 | .88 | . . . | . . . | . . . | 1.09 | 1.11 | 1.05 | .99 | .96 | .94 | .91 | .90 | .88 | .87 | .87 | .88 | .87 | .87 |
| 6 | . . . | . . . | . . . | 1.25 | 1.16 | 1.10 | 1.02 | .98 | .96 | .93 | .92 | .89 | . . . | . . . | . . . | 1.12 | 1.16 | 1.10 | 1.02 | .98 | .96 | .93 | .92 | .89 | .88 | .88 | .89 | .88 | .88 |
| 6.5 | . . . | . . . | . . . | . . . | 1.22 | 1.15 | 1.07 | 1.00 | .98 | .94 | .93 | .90 | . . . | . . . | . . . | . . . | 1.22 | 1.15 | 1.07 | 1.00 | .97 | .94 | .93 | .90 | .89 | .89 | .90 | .89 | .89 |
| 7 | . . . | . . . | . . . | . . . | 1.27 | 1.20 | 1.12 | 1.04 | .99 | .96 | .94 | .92 | . . . | . . . | . . . | . . . | 1.27 | 1.20 | 1.12 | 1.04 | .99 | .96 | .94 | .92 | .91 | .90 | .91 | .90 | .90 |
| 7.5 | . . . | . . . | . . . | . . . | 1.33 | 1.26 | 1.16 | 1.09 | 1.02 | .97 | .95 | .93 | . . . | . . . | . . . | . . . | 1.33 | 1.26 | 1.16 | 1.09 | 1.02 | .97 | .95 | .93 | .92 | .91 | .92 | .91 | .89 |
| 8 | . . . | . . . | . . . | . . . | . . . | 1.31 | 1.21 | 1.13 | 1.06 | .99 | .97 | .94 | . . . | . . . | . . . | . . . | . . . | 1.31 | 1.21 | 1.13 | 1.06 | .99 | .97 | .94 | .93 | .92 | .93 | .92 | .92 |
| 8.5 | . . . | . . . | . . . | . . . | . . . | 1.36 | 1.25 | 1.17 | 1.10 | 1.00 | .98 | .95 | . . . | . . . | . . . | . . . | . . . | 1.36 | 1.26 | 1.17 | 1.10 | 1.00 | .98 | .95 | .95 | .93 | .94 | .93 | .92 |
| 9 | . . . | . . . | . . . | . . . | . . . | . . . | 1.30 | 1.22 | 1.14 | 1.04 | .99 | .96 | . . . | . . . | . . . | . . . | . . . | . . . | 1.30 | 1.22 | 1.14 | 1.04 | .99 | .96 | .96 | .94 | .95 | .94 | .93 |
| 10 | . . . | . . . | . . . | . . . | . . . | . . . | 1.39 | 1.30 | 1.22 | 1.11 | 1.05 | .99 | . . . | . . . | . . . | . . . | . . . | . . . | 1.40 | 1.30 | 1.22 | 1.11 | 1.05 | .99 | .99 | .96 | .97 | .96 | .95 |
| 11 | . . . | . . . | . . . | . . . | . . . | . . . | . . . | 1.39 | 1.30 | 1.18 | 1.12 | 1.03 | . . . | . . . | . . . | . . . | . . . | . . . | . . . | 1.39 | 1.30 | 1.18 | 1.12 | 1.03 | 1.03 | .99 | .99 | .98 | .97 |
| 12 | . . . | . . . | . . . | . . . | . . . | . . . | . . . | . . . | 1.38 | 1.25 | 1.18 | 1.09 | . . . | . . . | . . . | . . . | . . . | . . . | . . . | . . . | 1.38 | 1.25 | 1.18 | 1.09 | 1.09 | 1.02 | 1.03 | 1.00 | .98 |
| 13 | . . . | . . . | . . . | . . . | . . . | . . . | . . . | . . . | . . . | 1.32 | 1.25 | 1.15 | . . . | . . . | . . . | . . . | . . . | . . . | . . . | . . . | . . . | 1.32 | 1.25 | 1.15 | 1.15 | 1.07 | 1.08 | 1.04 | 1.00 |
| 14 | . . . | . . . | . . . | . . . | . . . | . . . | . . . | . . . | . . . | 1.39 | 1.32 | 1.21 | . . . | . . . | . . . | . . . | . . . | . . . | . . . | . . . | . . . | 1.39 | 1.32 | 1.21 | 1.20 | 1.13 | 1.13 | 1.09 | 1.05 |
| 15 | Center line of load is beyond | | | | | | | . . . | . . . | . . . | 1.39 | 1.27 | Center line of load is beyond | | | | | | | . . . | . . . | . . . | 1.39 | 1.27 | 1.26 | 1.18 | 1.18 | 1.14 | 1.10 |
| 16 | end of standard low speed shaft. | | | | | | | . . . | . . . | . . . | 1.45 | 1.33 | end of standard low speed shaft. | | | | | | | . . . | . . . | . . . | 1.45 | 1.33 | 1.32 | 1.24 | 1.23 | 1.19 | 1.15 |
| 17 | Consult Factory for special shaft. | | | | | | | . . . | . . . | . . . | . . . | 1.39 | Consult Factory for special shaft. | | | | | | | . . . | . . . | . . . | . . . | 1.39 | 1.38 | 1.29 | 1.28 | 1.25 | 1.19 |
| 18 | | | | | | | | . . . | . . . | . . . | . . . | 1.45 | | | | | | | | . . . | . . . | . . . | . . . | 1.45 | 1.44 | 1.34 | 1.33 | 1.30 | 1.24 |

∗ Interpolate for intermediate values.


© Rexnord Industries, LLC, 1998, 2009.

## Type A, AR & AXV

# High Speed Shaft Overhung Load */Pounds

| High Speed Shaft rpm | Nominal Ratio ±4% | Approx. Low Speed Shaft rpm | DOUBLE REDUCTION | | | | | | | | | | | | | | | | |
|---|---|---|---|---|---|---|---|---|---|---|---|---|---|---|---|---|---|---|---|
| | | | DRIVE SIZE | | | | | | | | | | | | | | | | |
| | | | 305 | 325 | 345 | 365 | 385 | 405 | 425 | 445 | 465 | 485 | 505 | 525 | 535 | 545 | 555 | 565 | 585 |
| 1170 | 5.60 | 210 | . . . | . . . | . . . | . . . | 1300 | ♦ | ♦ | 950 | 3000 | 3500 | 2050 | 1110 | ♦ | 740 | ♦ | ♦ | ♦ |
| | 6.20 | 190 | 1530 | 590 | 210 | 460 | 1300 | ♦ | ♦ | 2500 | 3000 | 3500 | 3510 | 2360 | 3690 | 3670 | 3080 | 3040 | 3300 |
| | 6.86 | 170 | 1530 | 680 | 210 | 880 | 1300 | 360 | ♦ | 2500 | 3000 | 3500 | 2410 | 1740 | 170 | 230 | ♦ | ♦ | 2320 |
| | 7.59 | 155 | 1530 | 760 | 510 | 1100 | 1300 | 970 | ♦ | 2500 | 3000 | 3500 | 2910 | 2960 | 4700 | 3250 | 2070 | 2700 | 5190 |
| | 8.40 | 140 | 1530 | 760 | 840 | 1310 | 1300 | ♦ | 180 | 2500 | 3000 | 3500 | 1840 | 2490 | ♦ | 3840 | ♦ | 5080 | 3880 |
| | 9.30 | 125 | 1550 | 1010 | 1250 | 1550 | 1300 | 1210 | 300 | 2500 | 3000 | 3500 | 4000 | 4010 | 480 | 3080 | 1700 | 2590 | 5170 |
| | 10.29 | 115 | 1550 | 1090 | 1570 | 1800 | 1300 | 1600 | 700 | 2500 | 3000 | 3500 | 1770 | ♦ | 4700 | 3680 | 5600 | 4940 | 2690 |
| | 11.39 | 100 | 1500 | 1060 | 1490 | 720 | 1300 | 1600 | 1340 | 2500 | 3000 | 3500 | 4000 | 4700 | 4700 | 3390 | 2560 | 1730 | 5150 |
| | 12.61 | 90 | 1500 | 1060 | 1490 | 840 | 1300 | 1430 | 890 | 2500 | 3000 | 3500 | 1500 | 1660 | ♦ | 3990 | 5600 | 3720 | 1530 |
| | 13.95 | 84 | 1500 | 1080 | 1550 | 1050 | 1300 | 1600 | 1530 | 2500 | 3000 | 2870 | 2540 | 4700 | 2280 | 1460 | 5600 | 5770 | 3660 |
| | 15.44 | 75 | 1500 | 1330 | 1900 | 880 | 1300 | 1600 | 2000 | 2500 | 3000 | 3500 | 4000 | ♦ | ♦ | 2530 | 990 | 6800 | 2270 |
| | 17.09 | 68 | 1500 | 1670 | 2230 | 1070 | 1300 | 1600 | 1690 | 2500 | 3000 | 2750 | 3930 | 4700 | ♦ | 4630 | 5600 | 6430 | 3980 |
| | 18.91 | 60 | 1160 | 1390 | 2070 | 1590 | 1300 | 1600 | 1840 | 2500 | 3000 | 3500 | 4000 | 4700 | 4700 | 4650 | 5600 | 5740 | 4460 |
| | 20.93 | 56 | 1160 | 1670 | 2370 | 1590 | 1300 | 1600 | 2000 | 2500 | 3000 | 3500 | 4000 | 4700 | 4700 | 4950 | 5600 | 6800 | 8100 |
| | 23.16 | 50 | 1160 | 1500 | 2180 | 1790 | | | | | | | | | | | | | |
| | 25.63 | 45 | 1160 | 1670 | 2410 | 2220 | | | | | | | | | | | | | |
| | 28.36 | 40 | 1160 | 1670 | 2410 | 1820 | | | | | | | | | | | | | |
| | 31.39 | 37 | 1160 | 1670 | 2310 | 2220 | | | | | | | | | | | | | |
| | 34.74 | 34 | 1160 | 1670 | 2320 | 2490 | | | | | | | | | | | | | |
| 870 | 5.60 | 155 | . . . | . . . | . . . | . . . | 1300 | ♦ | ♦ | 1010 | 3000 | 3500 | 2250 | 1220 | ♦ | 810 | ♦ | ♦ | 1940 |
| | 6.20 | 140 | 1550 | 580 | 220 | 490 | 1300 | 220 | 400 | 2500 | 3000 | 3500 | 3830 | 2580 | 4030 | 4020 | 3360 | 3320 | 3610 |
| | 6.86 | 130 | 1550 | 580 | 220 | 950 | 1300 | 590 | 810 | 2500 | 3000 | 3500 | 2630 | 1900 | 200 | 240 | ♦ | ♦ | 2530 |
| | 7.59 | 115 | 1550 | 640 | 380 | 1130 | 1300 | 1580 | 670 | 2500 | 3000 | 3500 | 3180 | 3230 | 4700 | 3550 | 2280 | 2950 | 5670 |
| | 8.40 | 105 | 1550 | 740 | 820 | 1440 | 1300 | 800 | 1060 | 2500 | 3000 | 3500 | 2020 | 2730 | ♦ | 4190 | ♦ | 5550 | 4240 |
| | 9.30 | 95 | 1550 | 990 | 1230 | 1860 | 1300 | 1600 | 1180 | 2500 | 3000 | 3500 | 4000 | 4390 | 520 | 3370 | 1840 | 2830 | 5650 |
| | 10.29 | 85 | 1550 | 1080 | 1550 | 2210 | 1300 | 1600 | 1590 | 2500 | 3000 | 3500 | 1930 | ♦ | 4700 | 4030 | 5600 | 5400 | 2940 |
| | 11.39 | 77 | 1500 | 1370 | 1880 | 1170 | 1300 | 1600 | 2000 | 2500 | 3000 | 3500 | 4000 | 4700 | 4700 | 3710 | 2780 | 1880 | 5630 |
| | 12.61 | 70 | 1500 | 1370 | 1880 | 1170 | 1300 | 1600 | 1770 | 2500 | 3000 | 3500 | 2070 | 1830 | ♦ | 4370 | 5600 | 4070 | 3260 |
| | 13.95 | 62 | 1500 | 1370 | 1960 | 1320 | 1300 | 1600 | 2000 | 2500 | 3000 | 3140 | 3040 | 4700 | 2510 | 3040 | 5600 | 6300 | 4000 |
| | 15.44 | 55 | 1500 | 1630 | 2310 | 1330 | 1300 | 1600 | 2000 | 2500 | 3000 | 3500 | 4000 | ♦ | ♦ | 4700 | 1110 | 6800 | 5960 |
| | 17.09 | 50 | 1500 | 1670 | 2410 | 1480 | 1300 | 1600 | 2000 | 2500 | 3000 | 3500 | 4000 | 4700 | ♦ | 5600 | 5600 | 6800 | 8100 |
| | 18.91 | 45 | 1160 | 1670 | 2410 | 1990 | 1300 | 1600 | 2000 | 2500 | 3000 | 3500 | 4000 | 4700 | 4700 | 5600 | 5600 | 6800 | 8100 |
| | 20.93 | 42 | 1160 | 1670 | 2410 | 1990 | 1300 | 1600 | 2000 | 2500 | 3000 | 3500 | 4000 | 4700 | 4700 | 5600 | 5600 | 6800 | 8100 |
| | 23.16 | 38 | 1160 | 1670 | 2410 | 2230 | | | | | | | | | | | | | |
| | 25.63 | 34 | 1160 | 1670 | 2410 | 2640 | | | | | | | | | | | | | |
| | 28.36 | 31 | 1160 | 1670 | 2410 | 2240 | | | | | | | | | | | | | |
| | 31.39 | 28 | 1160 | 1670 | 2310 | 2650 | | | | | | | | | | | | | |
| | 34.74 | 25 | 1160 | 1670 | 2320 | 2920 | | | | | | | | | | | | | |

* Overhung load values listed are for loads applied one shaft diameter from the seal cage with a service factor of unity. Where overhung load is proportional to torque (i.e., pinion, sprocket or sheave applications) an appropriate service factor must be considered in the overhung load calculation. Published ratings are based on a combination of the most unfavorable conditions of loading. Values shown apply to high speed shaft extensions on either side of the gear drive. Consult Factory for ratings of drives with fans and for speeds higher than 1170 rpm.

♦ Consult Factory for overhung load ratings.

© Rexnord Industries,LLC, 1998, 2009.

## Type A, AR & AXV

# High Speed Shaft Overhung Load */Pounds

| High Speed Shaft rpm | Nominal Ratio ±4% | Approx. Low Speed Shaft rpm | DOUBLE REDUCTION | | | | | | | | | | | | | | | | |
|---|---|---|---|---|---|---|---|---|---|---|---|---|---|---|---|---|---|---|---|
| | | | DRIVE SIZE | | | | | | | | | | | | | | | | |
| | | | 305 | 325 | 345 | 365 | 385 | 405 | 425 | 445 | 465 | 485 | 505 | 525 | 535 | 545 | 555 | 565 | 585 |
| 720 | 5.60 | 130 | . . . | . . . | . . . | . . . | 1300 | 430 | 560 | 1080 | 3000 | 3500 | 2380 | 1290 | ♦ | 850 | ♦ | ♦ | 5050 |
| | 6.20 | 115 | 1550 | 580 | 210 | 710 | 1300 | 750 | 1020 | 2500 | 3000 | 3500 | 4000 | 2740 | 4240 | 4250 | 3540 | 3510 | 5050 |
| | 6.86 | 105 | 1550 | 580 | 210 | 950 | 1300 | 1120 | 1400 | 2500 | 3000 | 3500 | 2780 | 2010 | 200 | 260 | ♦ | ♦ | 5050 |
| | 7.59 | 95 | 1550 | 630 | 370 | 1130 | 1300 | 1600 | 1270 | 2500 | 3000 | 3500 | 3360 | 3430 | 4700 | 3750 | 2400 | 3130 | 6000 |
| | 8.40 | 85 | 1550 | 730 | 800 | 1600 | 1300 | 1340 | 1660 | 2500 | 3000 | 3500 | 2120 | 2890 | ♦ | 4430 | ♦ | 5880 | 4490 |
| | 9.30 | 77 | 1550 | 990 | 1210 | 2140 | 1300 | 1600 | 1800 | 2500 | 3000 | 3500 | 4000 | 4640 | 550 | 3570 | 1940 | 3000 | 5980 |
| | 10.29 | 70 | 1550 | 1080 | 1520 | 2500 | 1300 | 1600 | 2000 | 2500 | 3000 | 3500 | 2640 | ♦ | 4700 | 4260 | 5600 | 5710 | 5950 |
| | 11.39 | 62 | 1500 | 1580 | 2120 | 1460 | 1300 | 1600 | 2000 | 2500 | 3000 | 3500 | 4000 | 4700 | 4700 | 4400 | 2960 | 2630 | 8100 |
| | 12.61 | 55 | 1500 | 1580 | 2120 | 1460 | 1300 | 1600 | 2000 | 2500 | 3000 | 3500 | 3700 | 1950 | ♦ | 5600 | 5600 | 4420 | 6360 |
| | 13.95 | 50 | 1500 | 1580 | 2230 | 1620 | 1300 | 1600 | 2000 | 2500 | 3000 | 3500 | 4000 | 4700 | 2610 | 5150 | 5600 | 6800 | 4240 |
| | 15.44 | 45 | 1500 | 1670 | 2410 | 1600 | 1300 | 1600 | 2000 | 2500 | 3000 | 3500 | 4000 | 1960 | ♦ | 5600 | 1170 | 6800 | 8100 |
| | 17.09 | 42 | 1500 | 1670 | 2410 | 1730 | 1300 | 1600 | 2000 | 2500 | 3000 | 3500 | 4000 | 4700 | 4700 | 5600 | 5600 | 6800 | 8100 |
| | 18.91 | 38 | 1160 | 1670 | 2410 | 2140 | 1300 | 1600 | 2000 | 2500 | 3000 | 3500 | 4000 | 4700 | 4700 | 5600 | 5600 | 6800 | 8100 |
| | 20.93 | 34 | 1160 | 1670 | 2410 | 2140 | 1300 | 1600 | 2000 | 2500 | 3000 | 3500 | 4000 | 4700 | 4700 | 5600 | 5600 | 6800 | 8100 |
| | 23.16 | 31 | 1160 | 1670 | 2410 | 2410 | | | | | | | | | | | | | |
| | 25.63 | 28 | 1160 | 1670 | 2410 | 2820 | | | | | | | | | | | | | |
| | 28.36 | 25 | 1160 | 1670 | 2410 | 2360 | | | | | | | | | | | | | |
| | 31.39 | 22 | 1160 | 1670 | 2310 | 2780 | | | | | | | | | | | | | |
| | 34.74 | 21 | 1160 | 1670 | 2320 | 3060 | | | | | | | | | | | | | |
| 580 | 5.60 | 105 | . . . | . . . | . . . | . . . | 1300 | 1090 | 1290 | 1160 | 3000 | 3500 | 2540 | 1380 | ♦ | 910 | ♦ | ♦ | 8100 |
| | 6.20 | 95 | 1550 | 580 | 210 | 860 | 1300 | 1400 | 1750 | 2500 | 3000 | 3500 | 4000 | 2920 | 4550 | 4530 | 3770 | 3740 | 8100 |
| | 6.86 | 85 | 1550 | 580 | 210 | 950 | 1300 | 1600 | 2000 | 2500 | 3000 | 3500 | 2970 | 2150 | 200 | 1810 | ♦ | ♦ | 8100 |
| | 7.59 | 77 | 1550 | 630 | 350 | 1130 | 1300 | 1600 | 2000 | 2500 | 3000 | 3500 | 3590 | 3650 | 4700 | 4010 | 2560 | 3330 | 6410 |
| | 8.40 | 70 | 1550 | 730 | 770 | 1660 | 1300 | 1600 | 2000 | 2500 | 3000 | 3500 | 3560 | 3080 | ♦ | 5090 | 5220 | 6270 | 7140 |
| | 9.30 | 62 | 1550 | 980 | 1190 | 2160 | 1300 | 1600 | 2000 | 2500 | 3000 | 3500 | 4000 | 4700 | 610 | 5000 | 5220 | 4200 | 8100 |
| | 10.29 | 55 | 1550 | 1080 | 1520 | 2520 | 1300 | 1600 | 2000 | 2500 | 3000 | 3500 | 4000 | ♦ | 4700 | 5600 | 5600 | 6100 | 8100 |
| | 11.39 | 50 | 1500 | 1670 | 2120 | 1460 | 1300 | 1600 | 2000 | 2500 | 3000 | 3500 | 4000 | 4700 | 4700 | 5600 | 3170 | 5560 | 8100 |
| | 12.61 | 45 | 1500 | 1670 | 2120 | 1460 | 1300 | 1600 | 2000 | 2500 | 3000 | 3500 | 4000 | 4700 | ♦ | 5600 | 5600 | 6800 | 8100 |
| | 13.95 | 42 | 1500 | 1670 | 2230 | 1620 | 1300 | 1600 | 2000 | 2500 | 3000 | 3500 | 4000 | 4700 | 4700 | 5600 | 5600 | 6800 | 6000 |
| | 15.44 | 38 | 1500 | 1670 | 2410 | 1600 | 1300 | 1600 | 2000 | 2500 | 3000 | 3500 | 4000 | 4700 | 430 | 5600 | 1250 | 6800 | 8100 |
| | 17.09 | 34 | 1500 | 1670 | 2410 | 1730 | 1300 | 1600 | 2000 | 2500 | 3000 | 3500 | 4000 | 4700 | 4700 | 5600 | 5600 | 6800 | 8100 |
| | 18.91 | 31 | 1160 | 1670 | 2410 | 2140 | 1300 | 1600 | 2000 | 2500 | 3000 | 3500 | 4000 | 4700 | 4700 | 5600 | 5600 | 6800 | 8100 |
| | 20.93 | 28 | 1160 | 1670 | 2410 | 2140 | 1300 | 1600 | 2000 | 2500 | 3000 | 3500 | 4000 | 4700 | 4700 | 5600 | 5600 | 6800 | 8100 |
| | 23.16 | 25 | 1160 | 1670 | 2410 | 2410 | | | | | | | | | | | | | |
| | 25.63 | 22 | 1160 | 1670 | 2410 | 2820 | | | | | | | | | | | | | |
| | 28.36 | 21 | 1160 | 1670 | 2410 | 2360 | | | | | | | | | | | | | |
| | 31.39 | 18 | 1160 | 1670 | 2300 | 2780 | | | | | | | | | | | | | |
| | 34.74 | 17 | 1160 | 1670 | 2320 | 3060 | | | | | | | | | | | | | |

* Overhung load values listed are for loads applied one shaft diameter from the seal cage with a service factor of unity. Where overhung load is proportional to torque (i.e., pinion, sprocket or sheave applications) an appropriate service factor must be considered in the overhung load calculation. Published ratings are based on a combination of the most unfavorable conditions of loading. Values shown apply to high speed shaft extensions on either side of the gear drive. Consult Factory for ratings of drives with fans and for speeds higher than 1170 rpm.

♦ Consult Factory for overhung load ratings.



© Rexnord Industries, LLC, 1998, 2009.

## Type A, AR & AXV

# High Speed Shaft Overhung Load */Pounds

| High Speed Shaft rpm | Nominal Ratio ±4% | Approx. Low Speed Shaft rpm | TRIPLE REDUCTION | | | | | | | | | | | | | | | | |
|---|---|---|---|---|---|---|---|---|---|---|---|---|---|---|---|---|---|---|---|
| | | | DRIVE SIZE | | | | | | | | | | | | | | | | |
| | | | 305 | 325 | 345 | 365 | 385 | 405 | 425 | 445 | 465 | 485 | 505 | 525 | 535 | 545 | 555 | 565 | 585 |
| 1170 | 23.16 | 50 | . . . | . . . | . . . | . . . | 900 | 1200 | 1600 | 2000 | 2500 | 2840 | ♦ | 4000 | 3090 | 4800 | 1780 | 5700 | 6800 |
| | 25.63 | 45 | . . . | . . . | . . . | . . . | 900 | 1200 | 1600 | 2000 | 2500 | 3000 | ♦ | 4000 | 3340 | 4800 | 1780 | 5700 | 6800 |
| | 28.36 | 40 | . . . | . . . | . . . | . . . | 900 | 1200 | 1600 | 2000 | 2500 | 3000 | 2410 | 4000 | 3860 | 4800 | 2390 | 5700 | 6800 |
| | 31.39 | 37 | . . . | . . . | . . . | . . . | 900 | 1200 | 1600 | 2000 | 2500 | 3000 | 2040 | 4000 | 4000 | 4800 | 770 | 5700 | 6800 |
| | 34.74 | 34 | . . . | . . . | . . . | . . . | 900 | 1200 | 1600 | 2000 | 2500 | 3000 | 3500 | 4000 | 4000 | 4800 | 2100 | 5700 | 6800 |
| | 38.44 | 30 | 920 | 930 | 1590 | 1210 | 900 | 1200 | 1600 | 2000 | 2500 | 3000 | 3500 | 4000 | 4000 | 4800 | 430 | 5700 | 6800 |
| | 42.54 | 27 | 920 | 930 | 1590 | 1210 | 900 | 1200 | 1600 | 2000 | 2500 | 3000 | 3500 | 4000 | 4000 | 4800 | 2720 | 5700 | 6800 |
| | 47.08 | 25 | 920 | 940 | 1590 | 1210 | 900 | 1200 | 1600 | 2000 | 2500 | 3000 | 2940 | 4000 | 4000 | 4800 | 4030 | 5700 | 6800 |
| | 52.11 | 22 | 930 | 880 | 1590 | 1210 | 900 | 1200 | 1600 | 2000 | 2500 | 3000 | 3500 | 4000 | 4000 | 4800 | 3330 | 5700 | 6800 |
| | 57.66 | 20 | 930 | 940 | 1590 | 1210 | 900 | 1200 | 1600 | 2000 | 2500 | 3000 | 3500 | 4000 | 4000 | 4800 | 4800 | 5700 | 6800 |
| | 63.82 | 18 | 930 | 880 | 1590 | 1210 | 900 | 1200 | 1600 | 2000 | 2500 | 3000 | 3500 | 4000 | 4000 | 4800 | 4800 | 5700 | 6800 |
| | 70.62 | 16.5 | 940 | 900 | 1590 | 1210 | 900 | 1200 | 1600 | 2000 | 2500 | 3000 | 3500 | 4000 | 4000 | 4800 | 4800 | 5700 | 6800 |
| | 78.16 | 15.0 | 940 | 900 | 1590 | 1590 | 900 | 1200 | 1600 | 2000 | 2500 | 3000 | 3500 | 4000 | 4000 | 4800 | 4800 | 5700 | 6800 |
| | 86.50 | 13.5 | 940 | 910 | 1590 | 1590 | 900 | 1200 | 1600 | 2000 | 2500 | 3000 | 3500 | 4000 | 4000 | 4800 | 4800 | 5700 | 6800 |
| | 95.73 | 12.0 | 940 | 910 | 1590 | 1620 | 900 | 1200 | 1600 | 2000 | 2500 | 3000 | 3500 | 4000 | 4000 | 4800 | 4800 | 5700 | 6800 |
| | 105.9 | 11.0 | 940 | 910 | 1590 | 1620 | . . . | 1200 | 1600 | 2000 | 2500 | 3000 | 3500 | 4000 | 4000 | 4800 | 4800 | 5700 | 6800 |
| | 117.2 | 10.0 | 940 | 910 | 1590 | 1620 | | | | | | | | | | | | | |
| | 129.7 | 9.0 | 950 | 910 | 1590 | 1620 | | | | | | | | | | | | | |
| | 143.6 | 8.1 | 950 | 920 | 1590 | 1620 | | | | | | | | | | | | | |
| | 158.9 | 7.5 | 940 | 920 | 1590 | 1590 | | | | | | | | | | | | | |
| | 175.9 | 6.6 | 940 | 920 | 1590 | 1590 | | | | | | | | | | | | | |
| | 194.6 | 6.0 | 950 | 920 | 1590 | 1590 | | | | | | | | | | | | | |
| | 215.4 | 5.4 | 950 | 920 | 1590 | 1590 | | | | | | | | | | | | | |
| 870 | 23.16 | 38 | . . . | . . . | . . . | . . . | 900 | 1200 | 1600 | 2000 | 2500 | 3000 | 2030 | 4000 | 4000 | 4800 | 1950 | 5700 | 6800 |
| | 25.63 | 34 | . . . | . . . | . . . | . . . | 900 | 1200 | 1600 | 2000 | 2500 | 3000 | 2970 | 4000 | 4000 | 4800 | 1950 | 5700 | 6800 |
| | 28.36 | 31 | . . . | . . . | . . . | . . . | 900 | 1200 | 1600 | 2000 | 2500 | 3000 | 3500 | 4000 | 4000 | 4800 | 2620 | 5700 | 6800 |
| | 31.39 | 28 | . . . | . . . | . . . | . . . | 900 | 1200 | 1600 | 2000 | 2500 | 3000 | 3500 | 4000 | 4000 | 4800 | 1350 | 5700 | 6800 |
| | 34.74 | 25 | . . . | . . . | . . . | . . . | 900 | 1200 | 1600 | 2000 | 2500 | 3000 | 3500 | 4000 | 4000 | 4800 | 3620 | 5700 | 6800 |
| | 38.44 | 22 | 920 | 930 | 1590 | 1210 | 900 | 1200 | 1600 | 2000 | 2500 | 3000 | 3500 | 4000 | 4000 | 4800 | 2230 | 5700 | 6800 |
| | 42.54 | 21 | 920 | 930 | 1590 | 1210 | 900 | 1200 | 1600 | 2000 | 2500 | 3000 | 3500 | 4000 | 4000 | 4800 | 4630 | 5700 | 6800 |
| | 47.08 | 18 | 920 | 940 | 1590 | 1210 | 900 | 1200 | 1600 | 2000 | 2500 | 3000 | 3500 | 4000 | 4000 | 4800 | 4800 | 5700 | 6800 |
| | 52.11 | 17 | 930 | 880 | 1590 | 1210 | 900 | 1200 | 1600 | 2000 | 2500 | 3000 | 3500 | 4000 | 4000 | 4800 | 4800 | 5700 | 6800 |
| | 57.66 | 15 | 930 | 940 | 1590 | 1210 | 900 | 1200 | 1600 | 2000 | 2500 | 3000 | 3500 | 4000 | 4000 | 4800 | 4800 | 5700 | 6800 |
| | 63.82 | 14 | 930 | 880 | 1590 | 1210 | 900 | 1200 | 1600 | 2000 | 2500 | 3000 | 3500 | 4000 | 4000 | 4800 | 4800 | 5700 | 6800 |
| | 70.62 | 12.5 | 940 | 900 | 1590 | 1210 | 900 | 1200 | 1600 | 2000 | 2500 | 3000 | 3500 | 4000 | 4000 | 4800 | 4800 | 5700 | 6800 |
| | 78.16 | 11.0 | 930 | 910 | 1590 | 1590 | 900 | 1200 | 1600 | 2000 | 2500 | 3000 | 3500 | 4000 | 4000 | 4800 | 4800 | 5700 | 6800 |
| | 86.50 | 10.0 | 940 | 910 | 1590 | 1590 | 900 | 1200 | 1600 | 2000 | 2500 | 3000 | 3500 | 4000 | 4000 | 4800 | 4800 | 5700 | 6800 |
| | 95.73 | 9.1 | 940 | 910 | 1590 | 1620 | 900 | 1200 | 1600 | 2000 | 2500 | 3000 | 3500 | 4000 | 4000 | 4800 | 4800 | 5700 | 6800 |
| | 105.9 | 8.3 | 940 | 910 | 1590 | 1620 | . . . | 1200 | 1600 | 2000 | 2500 | 3000 | 3500 | 4000 | 4000 | 4800 | 4800 | 5700 | 6800 |
| | 117.2 | 7.5 | 940 | 910 | 1590 | 1620 | | | | | | | | | | | | | |
| | 129.7 | 6.8 | 950 | 910 | 1590 | 1620 | | | | | | | | | | | | | |
| | 143.6 | 6.1 | 950 | 920 | 1590 | 1620 | | | | | | | | | | | | | |
| | 158.9 | 5.5 | 940 | 920 | 1590 | 1590 | | | | | | | | | | | | | |
| | 175.9 | 5.0 | 940 | 920 | 1590 | 1590 | | | | | | | | | | | | | |
| | 194.6 | 4.5 | 950 | 920 | 1590 | 1590 | | | | | | | | | | | | | |
| | 215.4 | 4.1 | 950 | 920 | 1590 | 1590 | | | | | | | | | | | | | |

* Overhung load values listed are for loads applied one shaft diameter from the seal cage with a service factor of unity. Where overhung load is proportional to torque (i.e., pinion, sprocket or sheave applications) an appropriate service factor must be considered in the overhung load calculation. Published ratings are based on a combination of the most unfavorable conditions of loading. Values shown apply to high speed shaft extensions on either side of the gear drive. Consult Factory for ratings of drives with fans and for speeds higher than 1170 rpm.

♦ Consult Factory for overhung load ratings.

© Rexnord Industries,LLC, 1998, 2009.

## Type A, AR & AXV

# High Speed Shaft Overhung Load */Pounds

| High Speed Shaft rpm | Nominal Ratio ±4% | Approx. Low Speed Shaft rpm | TRIPLE REDUCTION | | | | | | | | | | | | | | | | |
|---|---|---|---|---|---|---|---|---|---|---|---|---|---|---|---|---|---|---|---|
| | | | DRIVE SIZE | | | | | | | | | | | | | | | | |
| | | | 305 | 325 | 345 | 365 | 385 | 405 | 425 | 445 | 465 | 485 | 505 | 525 | 535 | 545 | 555 | 565 | 585 |
| 720 | 23.16 | 31 | . . . | . . . | . . . | . . . | 900 | 1200 | 1600 | 2000 | 2500 | 3000 | 3500 | 4000 | 4000 | 4800 | 2190 | 5700 | 6800 |
| | 25.63 | 28 | . . . | . . . | . . . | . . . | 900 | 1200 | 1600 | 2000 | 2500 | 3000 | 3500 | 4000 | 4000 | 4800 | 2190 | 5700 | 6800 |
| | 28.36 | 25 | . . . | . . . | . . . | . . . | 900 | 1200 | 1600 | 2000 | 2500 | 3000 | 3500 | 4000 | 4000 | 4800 | 3700 | 5700 | 6800 |
| | 31.39 | 22 | . . . | . . . | . . . | . . . | 900 | 1200 | 1600 | 2000 | 2500 | 3000 | 3500 | 4000 | 4000 | 4800 | 2730 | 5700 | 6800 |
| | 34.74 | 21 | . . . | . . . | . . . | . . . | 900 | 1200 | 1600 | 2000 | 2500 | 3000 | 3500 | 4000 | 4000 | 4800 | 4800 | 5700 | 6800 |
| | 38.44 | 18 | 920 | 930 | 1590 | 1210 | 900 | 1200 | 1600 | 2000 | 2500 | 3000 | 3500 | 4000 | 4000 | 4800 | 3540 | 5700 | 6800 |
| | 42.54 | 17 | 920 | 930 | 1590 | 1210 | 900 | 1200 | 1600 | 2000 | 2500 | 3000 | 3500 | 4000 | 4000 | 4800 | 4800 | 5700 | 6800 |
| | 47.08 | 15 | 920 | 940 | 1590 | 1210 | 900 | 1200 | 1600 | 2000 | 2500 | 3000 | 3500 | 4000 | 4000 | 4800 | 4800 | 5700 | 6800 |
| | 52.11 | 14 | 930 | 880 | 1590 | 1210 | 900 | 1200 | 1600 | 2000 | 2500 | 3000 | 3500 | 4000 | 4000 | 4800 | 4800 | 5700 | 6800 |
| | 57.66 | 12.5 | 930 | 940 | 1590 | 1210 | 900 | 1200 | 1600 | 2000 | 2500 | 3000 | 3500 | 4000 | 4000 | 4800 | 4800 | 5700 | 6800 |
| | 63.82 | 11.0 | 930 | 880 | 1590 | 1210 | 900 | 1200 | 1600 | 2000 | 2500 | 3000 | 3500 | 4000 | 4000 | 4800 | 4800 | 5700 | 6800 |
| | 70.62 | 10.0 | 940 | 900 | 1590 | 1210 | 900 | 1200 | 1600 | 2000 | 2500 | 3000 | 3500 | 4000 | 4000 | 4800 | 4800 | 5700 | 6800 |
| | 78.16 | 9.1 | 930 | 910 | 1590 | 1590 | 900 | 1200 | 1600 | 2000 | 2500 | 3000 | 3500 | 4000 | 4000 | 4800 | 4800 | 5700 | 6800 |
| | 86.50 | 8.3 | 940 | 910 | 1590 | 1590 | 900 | 1200 | 1600 | 2000 | 2500 | 3000 | 3500 | 4000 | 4000 | 4800 | 4800 | 5700 | 6800 |
| | 95.73 | 7.5 | 940 | 910 | 1590 | 1620 | 900 | 1200 | 1600 | 2000 | 2500 | 3000 | 3500 | 4000 | 4000 | 4800 | 4800 | 5700 | 6800 |
| | 105.9 | 6.8 | 940 | 910 | 1590 | 1620 | . . . | 1200 | 1600 | 2000 | 2500 | 3000 | 3500 | 4000 | 4000 | 4800 | 4800 | 5700 | 6800 |
| | 117.2 | 6.1 | 940 | 910 | 1590 | 1620 | | | | | | | | | | | | | |
| | 129.7 | 5.5 | 950 | 910 | 1590 | 1620 | | | | | | | | | | | | | |
| | 143.6 | 5.0 | 950 | 920 | 1590 | 1620 | | | | | | | | | | | | | |
| | 158.9 | 4.5 | 940 | 920 | 1590 | 1590 | | | | | | | | | | | | | |
| | 175.9 | 4.1 | 940 | 920 | 1590 | 1590 | | | | | | | | | | | | | |
| | 194.6 | 3.8 | 950 | 920 | 1590 | 1590 | | | | | | | | | | | | | |
| | 215.4 | 3.3 | 950 | 920 | 1590 | 1590 | | | | | | | | | | | | | |
| 580 | 23.16 | 25 | . . . | . . . | . . . | . . . | 900 | 1200 | 1600 | 2000 | 2500 | 3000 | 3500 | 4000 | 4000 | 4800 | 3850 | 5700 | 6800 |
| | 25.63 | 22 | . . . | . . . | . . . | . . . | 900 | 1200 | 1600 | 2000 | 2500 | 3000 | 3500 | 4000 | 4000 | 4800 | 3850 | 5700 | 6800 |
| | 28.36 | 21 | . . . | . . . | . . . | . . . | 900 | 1200 | 1600 | 2000 | 2500 | 3000 | 3500 | 4000 | 4000 | 4800 | 4800 | 5700 | 6800 |
| | 31.39 | 18 | . . . | . . . | . . . | . . . | 900 | 1200 | 1600 | 2000 | 2500 | 3000 | 3500 | 4000 | 4000 | 4800 | 4390 | 5700 | 6800 |
| | 34.74 | 17 | . . . | . . . | . . . | . . . | 900 | 1200 | 1600 | 2000 | 2500 | 3000 | 3500 | 4000 | 4000 | 4800 | 4800 | 5700 | 6800 |
| | 38.44 | 15 | 920 | 930 | 1590 | 1210 | 900 | 1200 | 1600 | 2000 | 2500 | 3000 | 3500 | 4000 | 4000 | 4800 | 4800 | 5700 | 6800 |
| | 42.54 | 14 | 920 | 930 | 1590 | 1210 | 900 | 1200 | 1600 | 2000 | 2500 | 3000 | 3500 | 4000 | 4000 | 4800 | 4800 | 5700 | 6800 |
| | 47.08 | 12.5 | 920 | 940 | 1590 | 1210 | 900 | 1200 | 1600 | 2000 | 2500 | 3000 | 3500 | 4000 | 4000 | 4800 | 4800 | 5700 | 6800 |
| | 52.11 | 11.0 | 930 | 880 | 1590 | 1210 | 900 | 1200 | 1600 | 2000 | 2500 | 3000 | 3500 | 4000 | 4000 | 4800 | 4800 | 5700 | 6800 |
| | 57.66 | 10.0 | 930 | 940 | 1590 | 1210 | 900 | 1200 | 1600 | 2000 | 2500 | 3000 | 3500 | 4000 | 4000 | 4800 | 4800 | 5700 | 6800 |
| | 63.82 | 9.1 | 930 | 880 | 1590 | 1210 | 900 | 1200 | 1600 | 2000 | 2500 | 3000 | 3500 | 4000 | 4000 | 4800 | 4800 | 5700 | 6800 |
| | 70.62 | 8.3 | 940 | 900 | 1590 | 1210 | 900 | 1200 | 1600 | 2000 | 2500 | 3000 | 3500 | 4000 | 4000 | 4800 | 4800 | 5700 | 6800 |
| | 78.16 | 7.5 | 930 | 900 | 1590 | 1590 | 900 | 1200 | 1600 | 2000 | 2500 | 3000 | 3500 | 4000 | 4000 | 4800 | 4800 | 5700 | 6800 |
| | 86.50 | 6.8 | 940 | 910 | 1590 | 1590 | 900 | 1200 | 1600 | 2000 | 2500 | 3000 | 3500 | 4000 | 4000 | 4800 | 4800 | 5700 | 6800 |
| | 95.73 | 6.1 | 940 | 910 | 1590 | 1620 | 900 | 1200 | 1600 | 2000 | 2500 | 3000 | 3500 | 4000 | 4000 | 4800 | 4800 | 5700 | 6800 |
| | 105.9 | 5.5 | 940 | 910 | 1590 | 1620 | . . . | 1200 | 1600 | 2000 | 2500 | 3000 | 3500 | 4000 | 4000 | 4800 | 4800 | 5700 | 6800 |
| | 117.2 | 5.0 | 940 | 910 | 1590 | 1620 | | | | | | | | | | | | | |
| | 129.7 | 4.5 | 950 | 910 | 1590 | 1620 | | | | | | | | | | | | | |
| | 143.6 | 4.1 | 950 | 920 | 1590 | 1620 | | | | | | | | | | | | | |
| | 158.9 | 3.8 | 940 | 920 | 1590 | 1590 | | | | | | | | | | | | | |
| | 175.9 | 3.3 | 940 | 920 | 1590 | 1590 | | | | | | | | | | | | | |
| | 194.6 | 3.0 | 950 | 920 | 1590 | 1590 | | | | | | | | | | | | | |
| | 215.4 | 2.7 | 950 | 920 | 1590 | 1590 | | | | | | | | | | | | | |

* Overhung load values listed are for loads applied one shaft diameter from the seal cage with a service factor of unity. Where overhung load is proportional to torque (i.e., pinion, sprocket or sheave applications) an appropriate service factor must be considered in the overhung load calculation. Published ratings are based on a combination of the most unfavorable conditions of loading. Values shown apply to high speed shaft extensions on either side of the gear drive. Consult Factory for ratings of drives with fans and for speeds higher than 1170 rpm.


© Rexnord Industries, LLC, 1998, 2009.

## Type A, AR & AXV

# High Speed Shaft Overhung Load */Pounds

| High Speed Shaft rpm | Nominal Ratio ±5% | Approx. Low Speed Shaft rpm | QUADRUPLE REDUCTION DRIVE SIZE 385 | 405 | 425 | 445 | 465 | 485 | 505 | 525 | 535 | 555 |
|---|---|---|---|---|---|---|---|---|---|---|---|---|
| 1170 | 105.9 | 11.0 | 600 | | | | | | | | | |
| | 117.2 | 10.0 | 600 | 800 | 1000 | 1200 | 1500 | 1700 | 2000 | 2300 | 2300 | 1850 |
| | 129.7 or Higher | 9.0 or Lower | 600 | 800 | 1000 | 1200 | 1500 | 1700 | 2000 | 2300 | 2300 | 3000 |
| 870 | 105.9 | 8.3 | 600 | | | | | | | | | |
| | 117.2 or Higher | 7.5 or Lower | 600 | 800 | 1000 | 1200 | 1500 | 1700 | 2000 | 2300 | 2300 | 3000 |

## Type A

# Low Speed Shaft Overhung Load Ratings ▲/Pounds

Multiply values below by 1000

| High Speed Shaft rpm | Nominal Ratio ±3% | Approx. Low Speed Shaft rpm | SINGLE REDUCTION DRIVE SIZE 305 | 325 | 345 | 365 | 385 | 405 | 425 | 445 | 465 | 485 | 505 | 525 |
|---|---|---|---|---|---|---|---|---|---|---|---|---|---|---|
| 1750 | 1.84 | 950 | 3.21 | 5.64 | 5.72 | 7.98 | 12.5 | 6.08 | ♦ | 10.00 | 2.45 | ♦ | ♦ | 7.18 |
| | 2.03 | 860 | 3.15 | 5.82 | 5.94 | 8.34 | 12.5 | 6.60 | 2.74 | 11.6 | 5.91 | ♦ | ♦ | 9.31 |
| | 2.25 | 780 | 3.17 | 6.04 | 6.15 | 8.74 | 12.5 | 7.24 | 3.88 | 12.8 | 8.51 | ♦ | ♦ | 12.0 |
| | 2.49 | 700 | 3.17 | 6.25 | 6.38 | 8.96 | 12.5 | 7.96 | 5.24 | 14.6 | 10.6 | ♦ | ♦ | 13.5 |
| | 2.76 | 640 | 3.15 | 6.56 | 6.63 | 9.32 | 12.5 | 8.14 | 6.50 | 17.0 | 11.9 | 3.88 | ♦ | 15.9 |
| | 3.05 | 575 | 3.17 | 6.79 | 6.98 | 9.68 | 12.5 | 8.93 | 6.79 | 17.5 | 12.9 | 6.81 | 2.88 | 16.7 |
| | 3.38 | 520 | 3.21 | 7.03 | 7.22 | 9.95 | 12.5 | 8.45 | 7.44 | 18.8 | 13.8 | 11.6 | 7.11 | 18.8 |
| | 3.74 | 470 | 3.17 | 7.24 | 7.44 | 10.4 | 12.5 | 9.40 | 7.97 | 19.6 | 15.1 | 14.4 | 12.7 | 21.3 |
| | 4.13 | 420 | 3.21 | 7.53 | 7.72 | 10.8 | 12.5 | 11.6 | 9.27 | 20.3 | 16.8 | 20.1 | 19.8 | 25.0 |
| | 4.57 | 380 | 3.33 | 7.89 | 8.07 | 11.3 | 12.5 | 12.2 | 10.3 | 21.2 | 18.0 | 23.6 | 24.0 | 26.6 |
| | 5.06 | 350 | 3.52 | 7.96 | 8.70 | 11.7 | 12.5 | 13.9 | 12.1 | 22.7 | 18.8 | 25.0 | 29.5 | 37.0 |
| | 5.60 | 310 | 3.56 | 7.96 | 9.11 | 12.1 | | | | | | | | |
| 1170 | 1.84 | 640 | 3.02 | 6.36 | 6.75 | 9.00 | 12.5 | 6.86 | ♦ | 11.3 | 2.75 | ♦ | ♦ | 8.10 |
| | 2.03 | 575 | 2.95 | 6.57 | 6.88 | 9.41 | 12.5 | 7.45 | 3.10 | 13.1 | 6.67 | ♦ | ♦ | 10.5 |
| | 2.25 | 520 | 2.98 | 6.82 | 6.93 | 9.86 | 12.5 | 8.17 | 4.38 | 14.5 | 9.60 | ♦ | ♦ | 13.6 |
| | 2.49 | 470 | 2.97 | 7.05 | 7.20 | 10.1 | 12.5 | 8.99 | 5.91 | 16.5 | 12.0 | ♦ | ♦ | 15.2 |
| | 2.76 | 420 | 2.95 | 7.40 | 7.49 | 10.5 | 12.5 | 9.18 | 7.33 | 19.2 | 13.5 | 4.38 | ♦ | 17.9 |
| | 3.05 | 380 | 2.98 | 7.66 | 8.13 | 10.9 | 12.5 | 10.1 | 7.67 | 19.8 | 14.5 | 7.68 | 3.25 | 18.8 |
| | 3.38 | 350 | 3.01 | 7.75 | 8.14 | 11.2 | 12.5 | 10.5 | 8.40 | 21.2 | 15.6 | 13.1 | 8.04 | 21.2 |
| | 3.74 | 310 | 2.98 | 7.75 | 8.39 | 11.8 | 12.5 | 11.5 | 9.28 | 22.1 | 17.0 | 18.1 | 14.3 | 24.0 |
| | 4.13 | 280 | 3.07 | 7.73 | 8.71 | 12.1 | 12.5 | 14.1 | 12.0 | 22.9 | 19.0 | 22.7 | 22.4 | 30.9 |
| | 4.57 | 255 | 3.29 | 7.75 | 9.11 | 12.1 | 12.5 | 14.7 | 13.1 | 23.9 | 20.3 | 28.0 | 27.5 | 33.2 |
| | 5.06 | 230 | 3.49 | 7.90 | 10.1 | 12.0 | 12.5 | 15.0 | 14.9 | 25.0 | 21.2 | 31.6 | 38.7 | 48.5 |
| | 5.60 | 210 | 3.54 | 7.92 | 10.5 | 12.1 | | | | | | | | |
| 580 | 1.84 | 320 | 3.02 | 7.74 | 9.02 | 11.7 | 10.8 | 8.47 | 6.84 | 18.2 | 3.41 | 3.72 | 8.06 | 10.0 |
| | 2.03 | 290 | 2.92 | 7.65 | 9.20 | 11.7 | 11.3 | 9.20 | 3.82 | 16.2 | 8.22 | ♦ | ♦ | 13.0 |
| | 2.25 | 260 | 2.77 | 7.52 | 9.25 | 11.5 | 9.86 | 10.1 | 7.93 | 17.8 | 12.2 | ♦ | ♦ | 17.0 |
| | 2.49 | 235 | 2.68 | 7.41 | 9.42 | 11.5 | 10.3 | 11.1 | 8.40 | 20.4 | 14.8 | ♦ | ♦ | 19.9 |
| | 2.76 | 210 | 2.77 | 7.34 | 9.69 | 11.5 | 10.4 | 12.4 | 9.96 | 24.0 | 16.6 | 5.41 | ♦ | 22.1 |
| | 3.05 | 190 | 2.81 | 7.51 | 10.6 | 11.5 | 11.7 | 13.1 | 10.9 | 24.8 | 17.9 | 9.48 | 3.98 | 23.3 |
| | 3.38 | 175 | 2.88 | 7.35 | 10.4 | 11.5 | 11.4 | 15.0 | 12.6 | 25.0 | 19.2 | 34.2 | 9.94 | 26.2 |
| | 3.74 | 155 | 2.92 | 7.40 | 10.8 | 11.5 | 12.4 | 15.0 | 14.1 | 25.0 | 21.0 | 37.8 | 34.1 | 31.0 |
| | 4.13 | 140 | 3.02 | 7.55 | 11.0 | 11.5 | 12.5 | 15.0 | 17.2 | 25.0 | 23.4 | 37.7 | 38.5 | 52.2 |
| | 4.57 | 130 | 3.25 | 7.69 | 11.5 | 11.7 | 12.5 | 15.0 | 18.0 | 25.0 | 30.7 | 40.0 | 44.2 | 54.6 |
| | 5.06 | 115 | 3.46 | 7.86 | 11.6 | 11.9 | 12.5 | 15.0 | 18.0 | 25.0 | 31.9 | 40.0 | 50.0 | 60.0 |
| | 5.60 | 105 | 3.50 | 7.87 | 11.7 | 12.1 | | | | | | | | |

▲ Published ratings are for standard assemblies with shaft extensions as shown on Page 17 and are based on the most unfavorable conditions of loading. Interpolate for speeds between those shown. For speeds below 580 rpm use ratings for 580 rpm.

♦ Consult Factory for overhung load ratings.

* Overhung load values listed are for loads applied one shaft diameter from the seal cage with a service factor of unity. Where overhung load is proportional to torque (i.e., pinion, sprocket or sheave applications) an appropriate service factor must be considered in the overhung load calculation. Published ratings are based on a combination of the most unfavorable conditions of loading. Values shown apply to high speed shaft extensions on either side of the gear drive. Consult Factory for ratings of drives with fans.

© Rexnord Industries,LLC, 1998, 2009.

## Type A

# Low Speed Shaft Overhung Load Ratings ▲/Pounds

Multiply values below by 1000

| Approx. Low Speed Shaft rpm | DOUBLE, TRIPLE & QUADRUPLE REDUCTIONS | | | | | | | | | | | | | | |
|---|---|---|---|---|---|---|---|---|---|---|---|---|---|---|---|
| | DRIVE SIZE | | | | | | | | | | | | | | |
| | 305 | 325 | 345 | 365 | 385 | 405 | 425 | 445 | 465 | 485 | 505 | 525 | 545 | 565 | 585 |
| 310 | . . . | . . . | . . . | . . . | 12.5 | 15.0 | 15.6 | 20.8 | 20.6 | 32.1 | 29.4 | 41.6 | 49.0 | 70.9 | 68.4 |
| 280 | 3.16 | 7.45 | 9.09 | 11.2 | 12.5 | 15.0 | 15.8 | 21.8 | 21.4 | 34.9 | 30.1 | 45.4 | 50.6 | 69.0 | 68.6 |
| 255 | 3.16 | 7.45 | 9.17 | 11.2 | 12.5 | 15.0 | 15.9 | 22.1 | 21.8 | 34.1 | 30.2 | 44.1 | 51.3 | 75.1 | 72.7 |
| 230 | 3.16 | 7.45 | 9.25 | 11.2 | 12.5 | 15.0 | 16.8 | 22.9 | 22.8 | 36.9 | 31.0 | 48.1 | 53.2 | 72.3 | 72.9 |
| 210 | 3.16 | 7.45 | 9.55 | 11.2 | 12.5 | 15.0 | 16.9 | 23.4 | 23.2 | 36.2 | 32.1 | 46.9 | 54.5 | 74.4 | 77.2 |
| 190 | 3.16 | 7.45 | 9.82 | 11.2 | 12.5 | 15.0 | 17.8 | 24.1 | 24.2 | 39.2 | 32.9 | 51.1 | 56.3 | 75.4 | 77.4 |
| 170 | 3.16 | 7.45 | 10.2 | 11.2 | 12.5 | 15.0 | 17.9 | 25.0 | 24.6 | 38.3 | 33.9 | 49.8 | 57.9 | 77.6 | 83.8 |
| 155 | 3.16 | 7.45 | 10.4 | 11.2 | 12.5 | 15.0 | 18.0 | 25.0 | 25.4 | 39.6 | 35.0 | 51.3 | 59.8 | 80.2 | 81.9 |
| 140 | 3.16 | 7.45 | 10.8 | 11.2 | 12.5 | 15.0 | 18.0 | 25.0 | 26.4 | 40.0 | 37.2 | 57.0 | 61.3 | 92.1 | 84.6 |
| 125 | 3.16 | 7.45 | 11.2 | 11.2 | 12.5 | 15.0 | 18.0 | 25.0 | 26.9 | 40.0 | 37.0 | 57.5 | 62.0 | 85.1 | 87.7 |
| 110 | 3.16 | 7.45 | 11.2 | 11.2 | 12.5 | 15.0 | 18.0 | 25.0 | 28.0 | 40.0 | 38.2 | 57.5 | 65.6 | 86.0 | 92.3 |
| 100 | 3.16 | 7.45 | 11.2 | 11.2 | 12.5 | 15.0 | 18.0 | 25.0 | 28.7 | 40.0 | 39.6 | 60.0 | 65.9 | 86.0 | 93.1 |
| 93 | 3.16 | 7.45 | 11.2 | 11.2 | 12.5 | 15.0 | 18.0 | 25.0 | 29.9 | 40.0 | 40.4 | 60.0 | 69.4 | 86.0 | 98.0 |
| 84 | 3.16 | 7.45 | 11.2 | 11.2 | 12.5 | 15.0 | 18.0 | 25.0 | 31.8 | 40.0 | 42.6 | 60.0 | 70.0 | 86.0 | 98.9 |
| 77 | 3.16 | 7.45 | 11.2 | 11.2 | 12.5 | 15.0 | 18.0 | 25.0 | 31.6 | 40.0 | 43.1 | 60.0 | 72.0 | 86.0 | 100 |
| 70 | 3.16 | 7.45 | 11.2 | 11.2 | 12.5 | 15.0 | 18.0 | 25.0 | 33.0 | 40.0 | 45.0 | 60.0 | 72.0 | 86.0 | 100 |
| 62 | 3.16 | 7.45 | 11.2 | 11.2 | 12.5 | 15.0 | 18.0 | 25.0 | 33.0 | 40.0 | 47.3 | 60.0 | 72.0 | 86.0 | 100 |
| 57 or Lower | 3.16 | 7.45 | 11.2 | 11.2 | 12.5 | 15.0 | 18.0 | 25.0 | 33.0 | 40.0 | 50.0 | 60.0 | 72.0 | 86.0 | 100 |

▲ Published ratings are for standard assemblies with shaft extensions as shown on Page 17 and are based on the most unfavorable conditions of loading. Ratings are for a maximum input speed of 1750 rpm. Overhung load values listed are for loads applied one shaft diameter from the seal cage with a service factor of unity. Where overhung load is proportional to torque (i.e., pinion, sprocket or sheave applications) an appropriate service factor must be considered in the overhung load calculation.

## Type AXVU — Shaft up

# Low Speed Shaft Overhung Load – Pounds†

Multiply values listed below by 1000

| Approx. Low Speed Shaft rpm | DRIVE SIZE | | | | | | | |
|---|---|---|---|---|---|---|---|---|
| | 405 | 425 | 445 | 465 | 485 | 505 | 535 | 555 |
| 310 | 10.2 | 9.85 | 14.2 | 18.0 | 20.9 | 27.8 | 37.5 | 57.3 |
| 280 | 10.4 | 9.73 | 15.0 | 18.8 | 21.9 | 29.3 | 38.1 | 58.2 |
| 255 | 10.7 | 9.36 | 15.1 | 19.2 | 22.2 | 29.1 | 39.0 | 60.9 |
| 230 | 11.0 | 10.3 | 15.8 | 19.9 | 23.1 | 30.3 | 40.5 | 61.7 |
| 210 | 11.4 | 9.94 | 16.0 | 20.3 | 23.5 | 30.6 | 41.4 | 64.7 |
| 190 | 11.7 | 10.8 | 16.8 | 21.2 | 24.5 | 32.2 | 42.2 | 65.5 |
| 170 | 12.1 | 10.4 | 17.3 | 21.5 | 24.9 | 32.4 | 44.0 | 68.9 |
| 155 | 12.4 | 10.4 | 17.5 | 22.2 | 25.7 | 34.2 | 44.8 | 69.5 |
| 140 | 12.8 | 10.2 | 18.2 | 23.1 | 27.0 | 34.5 | 46.5 | 72.0 |
| 125 | 13.5 | 11.3 | 18.5 | 23.5 | 27.2 | 36.8 | 47.6 | 72.0 |
| 110 | 13.9 | 11.7 | 19.3 | 24.5 | 28.5 | 36.6 | 49.8 | 72.0 |
| 100 | 14.8 | 12.9 | 20.1 | 25.1 | 29.1 | 39.0 | 50.3 | 72.0 |
| 93 | 15.0 | 13.0 | 20.5 | 26.1 | 30.1 | 39.6 | 52.0 | 72.0 |
| 84 | 15.0 | 13.9 | 21.3 | 27.7 | 30.8 | 40.0 | 54.3 | 72.0 |
| 77 | 15.0 | 15.0 | 21.5 | 27.7 | 31.0 | 42.2 | 55.0 | 72.0 |
| 70 | 15.0 | 15.9 | 22.4 | 29.4 | 33.3 | 43.4 | 57.6 | 72.0 |
| 62 | 15.0 | 17.1 | 23.1 | 29.5 | 33.5 | 45.9 | 58.7 | 72.0 |
| 57 | 15.0 | 18.0 | 23.4 | 31.3 | 36.1 | 47.6 | 60.0 | 72.0 |
| 50 | 15.0 | 18.0 | 24.3 | 33.0 | 39.2 | 50.0 | 60.0 | 72.0 |
| 46 or Lower | 15.0 | 18.0 | 25.0 | 33.0 | 40.0 | 50.0 | 60.0 | 72.0 |

## Type AXVD — Shaft down

# Low Speed Shaft Overhung Load – Pounds†

Multiply values listed below by 1000

| Approx. Low Speed Shaft rpm | DRIVE SIZE | | | | | | | |
|---|---|---|---|---|---|---|---|---|
| | 405 | 425 | 445 | 465 | 485 | 505 | 535 | 555 |
| 310 | 15.0 | 15.6 | 20.8 | 26.2 | 32.4 | 42.2 | 35.2 | 72.0 |
| 280 | 15.0 | 15.8 | 21.8 | 27.0 | 33.9 | 43.7 | 33.9 | 72.0 |
| 255 | 15.0 | 15.9 | 22.1 | 27.0 | 34.4 | 44.9 | 36.3 | 72.0 |
| 230 | 15.0 | 16.8 | 22.9 | 28.7 | 36.0 | 45.9 | 35.8 | 72.0 |
| 210 | 15.0 | 16.9 | 23.4 | 29.6 | 36.5 | 47.6 | 38.5 | 72.0 |
| 190 | 15.0 | 17.8 | 24.1 | 30.4 | 38.2 | 48.8 | 37.1 | 72.0 |
| 170 | 15.0 | 17.9 | 25.0 | 31.3 | 38.6 | 50.0 | 40.9 | 72.0 |
| 155 | 15.0 | 18.0 | 25.0 | 32.2 | 39.9 | 50.0 | 39.4 | 72.0 |
| 140 | 15.0 | 18.0 | 25.0 | 33.0 | 40.0 | 50.0 | 41.8 | 72.0 |
| 125 | 15.0 | 18.0 | 25.0 | 33.0 | 40.0 | 50.0 | 41.8 | 72.0 |
| 110 | 15.0 | 18.0 | 25.0 | 33.0 | 40.0 | 50.0 | 44.2 | 72.0 |
| 100 | 15.0 | 18.0 | 25.0 | 33.0 | 40.0 | 50.0 | 44.3 | 72.0 |
| 93 | 15.0 | 18.0 | 25.0 | 33.0 | 40.0 | 50.0 | 45.7 | 72.0 |
| 84 | 15.0 | 18.0 | 25.0 | 33.0 | 40.0 | 50.0 | 50.5 | 72.0 |
| 77 | 15.0 | 18.0 | 25.0 | 33.0 | 40.0 | 50.0 | 48.4 | 72.0 |
| 70 | 15.0 | 18.0 | 25.0 | 33.0 | 40.0 | 50.0 | 52.1 | 72.0 |
| 62 | 15.0 | 18.0 | 25.0 | 33.0 | 40.0 | 50.0 | 51.6 | 72.0 |
| 57 | 15.0 | 18.0 | 25.0 | 33.0 | 40.0 | 50.0 | 55.4 | 72.0 |
| 50 | 15.0 | 18.0 | 25.0 | 33.0 | 40.0 | 50.0 | 59.6 | 72.0 |
| 46 or Lower | 15.0 | 18.0 | 25.0 | 33.0 | 40.0 | 50.0 | 60.0 | 72.0 |

† Overhung load values listed are for loads applied one shaft diameter from the seal cage with a service factor of unity. Where overhung load is proportional to torque (i.e., pinion, sprocket or sheave applications) an appropriate service factor must be considered in the overhung load calculation. Published ratings are for shaft extension as shown and are based on the most unfavorable conditions of loading. Ratings are for a maximum input speed of 1750 rpm.


© Rexnord Industries, LLC, 1998, 2009.

Type AXV — Shaft up or down

# Low Speed Shaft Thrust Capacity */Pounds

Multiply values listed below by 1000

THRUST UP

## Thrust Up

| Approx. Low Speed Shaft rpm | DRIVE SIZE | | | | | | | |
|---|---|---|---|---|---|---|---|---|
| | 405 | 425 | 445 | 465 | 485 | 505 | 535 | 555 |
| **310** | 11.5 | 13.0 | 13.5 | 16.8 | 20.4 | 25.4 | 28.8 | 60.0 |
| **280** | 11.5 | 12.9 | 14.1 | 17.5 | 22.2 | 26.9 | 27.9 | 60.0 |
| **255** | 11.5 | 12.5 | 14.3 | 17.8 | 21.6 | 27.0 | 29.5 | 60.0 |
| **230** | 11.5 | 13.7 | 14.8 | 18.6 | 23.5 | 27.7 | 29.6 | 60.0 |
| **210** | 11.5 | 13.3 | 15.0 | 18.9 | 23.0 | 28.7 | 31.4 | 60.0 |
| **190** | 11.5 | 14.4 | 15.6 | 19.8 | 24.9 | 29.4 | 30.5 | 60.0 |
| **170** | 11.5 | 14.0 | 16.0 | 20.0 | 24.3 | 33.5 | 33.3 | 60.0 |
| **155** | 11.5 | 14.4 | 16.6 | 20.7 | 23.1 | 31.3 | 32.4 | 60.0 |
| **140** | 11.5 | 15.2 | 16.7 | 21.6 | 27.4 | 33.2 | 34.5 | 60.0 |
| **125** | 11.5 | 16.4 | 17.4 | 21.9 | 26.6 | 33.7 | 34.4 | 60.0 |
| **110** | 11.5 | 16.5 | 17.8 | 22.9 | 28.4 | 34.2 | 36.5 | 60.0 |
| **100** | 11.5 | 16.5 | 18.5 | 23.6 | 29.6 | 35.8 | 36.4 | 60.0 |
| **93** | 11.5 | 16.5 | 18.9 | 24.4 | 30.0 | 36.2 | 37.6 | 60.0 |
| **84** | 11.5 | 16.5 | 19.6 | 25.0 | 30.0 | 38.0 | 41.1 | 60.0 |
| **77** | 11.5 | 16.5 | 20.0 | 25.0 | 30.0 | 38.6 | 39.8 | 60.0 |
| **70** | 11.5 | 16.5 | 20.6 | 25.0 | 30.0 | 40.0 | 43.1 | 60.0 |
| **62** | 11.5 | 16.5 | 21.0 | 25.0 | 30.0 | 40.0 | 42.5 | 60.0 |
| **57** | 11.5 | 16.5 | 21.0 | 25.0 | 30.0 | 40.0 | 45.8 | 60.0 |
| **50** | 11.5 | 16.5 | 21.0 | 25.0 | 30.0 | 40.0 | 49.0 | 60.0 |
| **46 or Lower** | 11.5 | 16.5 | 21.0 | 25.0 | 30.0 | 40.0 | 50.0 | 60.0 |

## Thrust Down

| Approx. Low Speed Shaft rpm | DRIVE SIZE | | | | | | | |
|---|---|---|---|---|---|---|---|---|
| | 405 | 425 | 445 | 465 | 485 | 505 | 535 | 555 |
| **310** | 11.2 | 12.6 | 13.1 | 16.3 | 19.7 | 24.6 | 50.0 | 57.4 |
| **280** | 11.5 | 12.4 | 13.7 | 17.1 | 21.5 | 26.1 | 50.0 | 58.4 |
| **255** | 11.5 | 12.0 | 13.9 | 17.3 | 20.9 | 26.1 | 50.0 | 60.0 |
| **230** | 11.5 | 13.2 | 14.3 | 18.1 | 22.7 | 26.8 | 50.0 | 60.0 |
| **210** | 11.5 | 12.7 | 14.6 | 18.4 | 24.7 | 27.7 | 50.0 | 60.0 |
| **190** | 11.5 | 13.9 | 15.2 | 19.2 | 24.1 | 28.5 | 50.0 | 60.0 |
| **170** | 11.5 | 15.3 | 15.5 | 19.5 | 23.5 | 32.3 | 50.0 | 60.0 |
| **155** | 11.5 | 13.8 | 16.1 | 20.1 | 24.3 | 30.3 | 50.0 | 60.0 |
| **140** | 11.5 | 14.5 | 16.3 | 21.7 | 26.5 | 32.2 | 50.0 | 60.0 |
| **125** | 11.5 | 15.7 | 17.0 | 21.3 | 25.7 | 32.1 | 50.0 | 60.0 |
| **110** | 11.5 | 16.5 | 17.2 | 22.3 | 28.0 | 33.1 | 50.0 | 60.0 |
| **100** | 11.5 | 16.5 | 18.0 | 23.0 | 27.4 | 34.7 | 50.0 | 60.0 |
| **93** | 11.5 | 16.5 | 18.3 | 23.7 | 29.6 | 35.0 | 50.0 | 60.0 |
| **84** | 11.5 | 16.5 | 19.0 | 25.0 | 30.0 | 36.9 | 50.0 | 60.0 |
| **77** | 11.5 | 16.5 | 19.4 | 25.0 | 30.0 | 37.4 | 50.0 | 60.0 |
| **70** | 11.5 | 16.5 | 20.0 | 25.0 | 30.0 | 40.0 | 50.0 | 60.0 |
| **62** | 11.5 | 16.5 | 20.6 | 25.0 | 30.0 | 40.0 | 50.0 | 60.0 |
| **57 or Lower** | 11.5 | 16.5 | 21.0 | 25.0 | 30.0 | 40.0 | 50.0 | 60.0 |

* Published ratings are based on a combination of the most unfavorable conditions of loading. For higher ratings, refer full data to the Factory. Consult the Factory for combined radial and thrust loads. Ratings are for a maximum input speed of 1750 rpm.

© Rexnord Industries,LLC, 1998, 2009.

# Exact Ratios/Parallel Shaft Gear Drives

### Single Reduction (Type A)

| Nominal Ratio * | DRIVE SIZE | | | | | | | | | | | |
|---|---|---|---|---|---|---|---|---|---|---|---|---|
| | 305 | 325 | 345 | 365 | 385 | 405 | 425 | 445 | 465 | 485 | 505 | 525 |
| **1.84** | 1.870 | 1.885 | 1.885 | 1.808 | 1.882 | 1.800 | 1.826 | 1.818 | 1.800 | 1.810 | 1.864 | 1.850 |
| **2.03** | 2.045 | 2.040 | 2.040 | 2.042 | 2.062 | 2.000 | 2.048 | 2.050 | 2.043 | 2.053 | 2.059 | 2.053 |
| **2.25** | 2.300 | 2.261 | 2.261 | 2.318 | 2.211 | 2.294 | 2.250 | 2.211 | 2.227 | 2.238 | 2.316 | 2.286 |
| **2.49** | 2.474 | 2.455 | 2.455 | 2.476 | 2.529 | 2.500 | 2.421 | 2.529 | 2.450 | 2.450 | 2.500 | 2.450 |
| **2.76** | 2.722 | 2.800 | 2.750 | 2.789 | 2.812 | 2.733 | 2.824 | 2.800 | 2.684 | 2.778 | 2.706 | 2.833 |
| **3.05** | 3.125 | 3.053 | 3.053 | 3.056 | 3.118 | 3.000 | 3.000 | 3.000 | 3.059 | 3.000 | 3.133 | 3.000 |
| **3.38** | 3.400 | 3.412 | 3.412 | 3.294 | 3.286 | 3.250 * | 3.333 | 3.471 | 3.312 | 3.389 | 3.429 | 3.250 * |
| **3.74** | 3.714 | 3.687 | 3.687 | 3.800 | 3.667 | 3.600 * | 3.643 | 3.750 | 3.667 | 3.647 | 3.687 | 3.600 * |
| **4.13** | 4.077 | 4.067 | 4.143 | 4.143 | 4.125 | 4.062 | 4.200 | 4.067 | 4.231 | 4.200 | 4.286 * | 4.062 |
| **4.57** | 4.533 | 4.529 | 4.615 | 4.615 | 4.467 | 4.400 * | 4.571 | 4.429 * | 4.437 | 4.571 | 4.692 | 4.400 * |
| **5.06** | 5.071 | 5.200 | 5.143 | 5.071 | 4.857 * | 4.812 * | 5.000 | 5.133 | 4.800 * | 5.000 | 5.143 | 4.812 * |
| **5.60** | 5.600 | 5.714 | 5.615 | 5.538 | | | | | | | | |

* Except where noted with an asterisk (*), exact ratios are within ±3% of the nominal ratios.

### Double Reduction (Type A, AR & AXV)

| Nominal Ratio * | DRIVE SIZE | | | | | | | | | | | | | | | | |
|---|---|---|---|---|---|---|---|---|---|---|---|---|---|---|---|---|---|
| | 305 | 325 | 345 | 365 | 385 | 405 | 425 | 445 | 465 | 485 | 505 | 525 | 535 | 545 | 555 | 565 | 585 |
| **5.60** | . . . | . . . | . . . | . . . | 5.861* | 5.591 | 5.591 | 5.647 | 5.506 | 5.478 | 5.697 | 5.400 | 5.700 | 5.542 | 5.641 | 5.591 | 5.781 |
| **6.20** | 6.182 | 6.336 | 6.285 | 6.159 | 6.177 | 6.057 | 6.212 | 6.533 * | 5.962 | 6.188 | 6.234 | 5.850 * | 6.141 | 6.032 | 6.107 | 6.406 | 6.290 |
| **6.86** | 6.753 | 6.848 | 6.793 | 7.104 | 6.893 | 6.709 | 6.789 | 7.059 | 6.600 | 6.660 | 6.705 | 6.682 | 7.053 | 6.854 | 6.978 | 6.947 | 6.856 |
| **7.59** | 7.413 | 7.552 | 7.632 | 7.745 | 7.755 | 7.571 | 7.544 | 7.672 | 7.599 | 7.625 | 7.579 | 7.239 * | 7.599 | 7.460 | 7.554 | 7.961* | 7.771 |
| **8.40** | 8.242 | 8.412 | 8.502 | 8.629 | 8.167 | 8.147 | 8.244 | 8.289 | 8.412 | 8.206 | 8.151 | 8.724 | 8.500 | 8.153 | 8.660 | 8.646 | 8.471 |
| **9.30** | 9.221 | 9.657 | 9.474 | 9.481 | 9.187 | 9.194 | 9.298 | 8.989 | 9.054 | 9.569 | 9.474 | 9.663 | 9.158 | 9.259 | 9.375 | 9.301 | 9.286 |
| **10.29** | 10.18 | 10.61 | 10.34 | 10.35 | 10.04 | 9.958 | 10.16 | 10.55 | 10.02 | 10.30 | 10.32 | 10.77 * | 9.898 | 10.12 | 10.37 | 10.10 | 10.50 |
| **11.39** | 11.03 | 11.44 | 11.83 | 11.20 | 11.29 | 10.99 | 11.72 | 11.44 | 11.56 | 11.30 | 12.00 * | 10.90 * | 10.92 * | 11.30 | 11.44 | 11.79 | 11.51 |
| **12.61** | 12.27 | 12.36 | 12.78 | 12.92 | 12.22 | 12.00 * | 12.52 | 12.32 | 11.92 * | 12.16 | 12.80 | 11.92 * | 12.21 | 12.35 | 12.65 | 12.80 | 12.04 * |
| **13.95** | 13.72 | 13.64 | 14.36 | 14.09 | 14.33 | 13.54 | 14.44 | 13.36 * | 13.75 | 14.00 | 13.94 | 13.46 | 13.47 | 14.00 | 13.80 | 13.96 | 13.81 |
| **15.44** | 14.93 | 15.19 | 16.00 | 15.49 | 15.52 | 15.12 | 15.71 | 15.47 | 14.90 | 15.24 | 14.87 | 15.23 | 15.60 | 15.30 | 15.68 | 15.01 | 15.06 |
| **17.09** | 16.71 | 17.44 | 17.83 | 16.89 | 16.74 | 17.06 | 17.10 | 16.77 | 17.19 | 17.64 | 17.43 | 17.19 | 17.21 | 17.12 | 17.10 | 17.45 | 16.50 |
| **18.91** | 18.98 | 19.09 | 19.33 | 19.27 | 18.13 * | 18.48 | 18.74 | 18.27 | 18.03 * | 19.20 | 19.08 | 19.50 | 19.30 | 18.64 | 18.61 | 19.10 | 17.87 * |
| **20.93** | 21.24 | 21.91 | 21.54 | 21.01 | 19.71 * | 20.21 | 20.40 | 21.17 | 19.50 * | 21.00 | 20.78 | 21.12 | 20.87 | 20.38 | 20.75 | 21.27 | 21.50 |
| **23.16** | 22.34 | 23.29 | 22.75 | 23.41 | | | | | | | | | | | | | |
| **25.63** | 24.99 | 26.74 | 25.35 | 25.72 | | | | | | | | | | | | | |
| **28.36** | 27.60 | 29.39 | 27.68 | 28.35 | | | | | | | | | | | | | |
| **31.39** | 31.21 | 31.57 | 30.49 | 31.15 | | | | | | | | | | | | | |
| **34.74** | 34.46 | 34.69 | 33.29 | 34.02 | | | | | | | | | | | | | |

* Except where noted with an asterisk (*), exact ratios are within ±4% of the nominal ratios.

**AVAILABILITY OF TYPES A /AR/ AXV DOUBLE REDUCTION**

| TYPE | 305 | 325 | 345 | 365 | 385 | 405 | 425 | 445 | 465 | 485 | 505 | 525 | 535 | 545 | 555 | 565 | 585 |
|---|---|---|---|---|---|---|---|---|---|---|---|---|---|---|---|---|---|
| **A** | X | X | X | X | X | X | X | X | X | X | X | X | . . . | X | . . . | X | X |
| **AR** | . . . | . . . | . . . | . . . | . . . | X | X | X | X | X | X | . . . | X | . . . | X | . . . | . . . |
| **AXV** | . . . | . . . | . . . | . . . | . . . | X | X | X | X | X | X | . . . | X | . . . | X | . . . | . . . |


© Rexnord Industries, LLC, 1998, 2009.

# Triple Reduction (Type A, AR & AXV)

| Nominal Ratio * | DRIVE SIZE | | | | | | | | | | | | | | | | |
|---|---|---|---|---|---|---|---|---|---|---|---|---|---|---|---|---|---|
| | 305 | 325 | 345 | 365 | 385 | 405 | 425 | 445 | 465 | 485 | 505 | 525 | 535 | 545 | 555 | 565 | 585 |
| **23.16** | . . . | . . . | . . . | . . . | 22.25 | 22.32 | 23.54 | 22.96 | 22.21 * | 22.88 | 23.69 | 22.36 | 22.31 | 22.94 | 22.38 | 22.91 | 23.39 |
| **25.63** | . . . | . . . | . . . | . . . | 25.03 | 24.37 * | 25.52 | 24.90 | 25.62 | 26.35 | 26.24 | 25.11 | 25.43 | 24.97 | 24.76 | 26.25 | 25.86 |
| **28.36** | . . . | . . . | . . . | . . . | 27.05 * | 27.50 | 27.89 | 27.89 | 26.97 * | 28.68 | 27.53 | 27.81 | 27.48 | 28.33 | 27.97 | 28.51 | 29.66 * |
| **31.39** | . . . | . . . | . . . | . . . | 31.77 | 31.03 | 32.16 | 30.24 | 31.12 | 30.95 | 31.20 | 30.40 | 31.91 | 31.63 | 31.36 | 31.64 | 32.33 |
| **34.74** | . . . | . . . | . . . | . . . | 34.33 | 34.65 | 34.27 | 33.34 * | 33.24 * | 33.68 | 34.12 | 33.67 | 34.49 | 34.71 | 35.43 | 34.36 | 33.79 |
| **38.44** | 38.23 | 39.22 | 38.86 | 38.11 | 38.63 | 39.10 | 39.51 | 37.96 | 38.36 | 39.37 | 38.67 | 38.82 | 38.04 | 39.20 | 38.87 | 39.04 | 36.60 * |
| **42.54** | 41.60 | 41.68 | 43.29 | 42.46 | 41.83 | 42.56 | 43.01 | 41.07 | 40.96 | 42.86 | 41.59 | 43.00 | 44.05 | 42.85 | 43.91 | 43.21 | 39.90 * |
| **47.08** | 46.54 | 47.86 | 47.31 | 45.70 | 49.02 * | 47.12 | 46.80 | 45.39 | 47.27 | 46.00 | 48.34 | 45.83 | 48.11 | 45.94 | 47.25 | 46.48 | 46.75 |
| **52.11** | 50.30 | 53.17 | 52.71 | 50.92 | 53.08 | 51.29 | 50.15 | 51.56 | 51.20 | 50.07 | 51.88 | 50.77 | 52.00 | 50.20 | 51.45 | 54.15 | 51.78 |
| **57.66** | 56.27 | 56.50 | 58.73 | 55.95 | 57.28 | 56.87 | 58.60 | 55.92 | 59.08 | 57.96 | 56.64 | 57.75 | 57.35 | 56.93 | 56.11 | 59.06 | 58.44 |
| **63.82** | 63.94 | 64.89 | 63.67 | 61.10 | 62.06 | 61.90 | 63.78 | 60.89 * | 61.97 | 63.09 | 61.68 | 63.97 | 65.52 | 62.22 | 63.77 | 63.52 | 61.87 |
| **70.62** | 71.53 | 73.82 | 70.94 | 69.59 | 72.52 | 73.33 | 69.41 | 70.45 | 69.98 | 72.76 | 70.80 | 72.19 | 72.26 | 70.92 | 69.54 | 72.06 | 69.82 |
| **78.16** | 78.31 | 81.12 | 80.93 | 77.10 | 77.49 | 75.97 | 76.06 | 76.72 | 79.39 | 79.20 | 77.10 | 75.71 | 75.79 | 76.33 | 76.22 | 77.43 | 79.22 |
| **86.50** | 87.60 | 90.40 | 90.18 | 84.72 | 90.61 * | 83.10 | 85.24 | 83.08 | 90.14 * | 86.20 | 84.42 | 85.94 | 83.06 | 87.90 | 87.78 | 83.76 | 85.80 |
| **95.73** | 92.16 | 96.09 | 95.25 | 98.02 | 98.53 | 97.27 | 94.39 | 97.67 | 97.50 | 93.26 | 91.83 * | 97.50 | 96.51 | 98.37 | 95.54 | 93.26 | 94.34 |
| **105.9** | 103.1 | 110.3 | 106.1 | 107.7 | . . . . . | 105.9 | 103.4 | 104.6 | 105.6 | 102.0 | 100.0 * | 105.6 | 101.2 * | 107.1 | 106.5 | 102.1 | 103.2 |
| **117.2** | 113.8 | 121.2 | 115.9 | 117.6 | | | | | | | | | | | | | |
| **129.7** | 128.7 | 130.2 | 127.7 | 130.5 | | | | | | | | | | | | | |
| **143.6** | 142.2 | 143.1 | 139.4 | 142.5 | | | | | | | | | | | | | |
| **158.9** | 158.2 | 164.3 | 156.0 | 162.0 | | | | | | | | | | | | | |
| **175.9** | 169.5 | 180.5 | 170.3 | 176.9 | | | | | | | | | | | | | |
| **194.6** | 197.6 | 193.9 | 187.6 | 191.7 | | | | | | | | | | | | | |
| **215.4** | 211.7 | 213.1 | 204.9 * | 209.4 | | | | | | | | | | | | | |

* Except where noted with an asterisk (*), exact ratios are within ±4% of the nominal ratios.

**AVAILABILITY OF TYPES A /AR/ AXV TRIPLE REDUCTION**

| TYPE | 305 | 325 | 345 | 365 | 385 | 405 | 425 | 445 | 465 | 485 | 505 | 525 | 535 | 545 | 555 | 565 | 585 |
|---|---|---|---|---|---|---|---|---|---|---|---|---|---|---|---|---|---|
| **A** | X | X | X | X | X | X | X | X | X | X | X | X | . . . | X | . . . | X | X |
| **AR** | . . . | . . . | . . . | . . . | . . . | X | X | X | X | X | X | . . . | X | . . . | X | . . . | . . . |
| **AXV** | . . . | . . . | . . . | . . . | . . . | X | X | X | X | X | X | . . . | X | . . . | X | . . . | . . . |

## Quadruple Reduction (Type A, AR & AXV)

| Nominal Ratios * | DRIVE SIZE | | | | | | | | | |
|---|---|---|---|---|---|---|---|---|---|---|
| | 385 | 405 | 425 | 445 | 465 | 485 | 505 | 525 | 535 | 555 |
| **105.9** | 108.4 | | | | | | | | | |
| **117.2** | 117.3 | 118.2 | 115.9 | 113.4 | 112.1 | 116.0 | 113.4 | 120.0 | 113.6 | 120.6 |
| **129.7** | 126.6 | 125.7 | 126.2 | 123.0 * | 129.4 | 124.5 | 126.4 | 127.9 | 125.3 | 133.4 |
| **143.6** | 137.1 | 148.2 | 135.2 * | 142.4 | 140.1 | 135.5 * | 145.0 | 141.6 | 145.1 | 143.6 |
| **158.9** | 158.2 | 167.9 * | 158.0 | 154.4 | 161.7 | 156.8 | 158.0 | 161.1 | 160.0 | 155.7 |
| **175.9** | 171.3 | 182.8 | 171.9 | 168.2 | 169.6 | 170.7 | 169.9 | 178.4 | 182.8 | 169.8 |
| **194.6** | 199.6 | 199.0 | 187.1 | 194.6 | 191.5 | 196.9 | 197.5 | 203.9 | 201.6 | 195.6 |
| **215.4** | 216.1 | 217.7 | 205.0 | 211.9 | 207.8 | 214.3 | 216.1 | 211.2 | 211.4 | 210.6 |
| **238.4** | 233.2 | 231.6 | 229.8 | 229.9 | 239.8 | 243.4 | 230.6 | 235.1 | 233.5 | 229.7 |
| **263.8** | 252.5 | 273.0 | 254.4 | 250.3 * | 251.5 | 265.0 | 251.1 | 260.4 | 266.8 | 264.5 |
| **291.9** | 291.4 | 298.6 | 277.6 | 289.6 | 284.0 | 305.6 | 288.3 | 293.9 | 294.2 | 286.9 |
| **323.1** | 315.5 | 336.7 | 304.2 * | 315.4 | 322.2 | 332.6 | 313.9 | 333.4 | 308.6 | 319.8 |
| **357.5** | 368.9 | 368.2 | 340.9 | 341.6 | 365.8 | 362.1 | 343.7 | 367.0 | 350.2 | 348.0 |
| **395.7** | 401.2 | 396.0 | 377.6 | 401.5 | 395.7 | 391.7 | 407.2 | 397.0 | 393.0 | 403.6 |
| **437.9** | . . . | 431.1 | 413.7 * | 429.8 | 428.6 | 426.3 | 431.5 | 429.9 | 445.8 | 439.3 |

* Except where noted with an asterisk (*), exact ratios are within ±5% of the nominal ratios.

**AVAILABILITY OF TYPES A /AR/ AXV QUADRUPLE REDUCTION**

| TYPE | 385 | 405 | 425 | 445 | 465 | 485 | 505 | 525 | 535 | 555 |
|---|---|---|---|---|---|---|---|---|---|---|
| **A** | X | X | X | X | X | X | X | X | . . . | . . . |
| **AR** | . . . | X | X | X | X | X | X | . . . | X | X |
| **AXV** | . . . | X | X | X | X | X | X | . . . | X | X |

© Rexnord Industries,LLC, 1998, 2009.

# Type A Single Reduction
## Sizes 305-525/Dimensions — Inches

*CAUTION: All (A1) Single reduction drive selections — check for possible interference between the low speed shaft connection and either the high speed shaft extension or the guard for the second high speed shaft extension.*

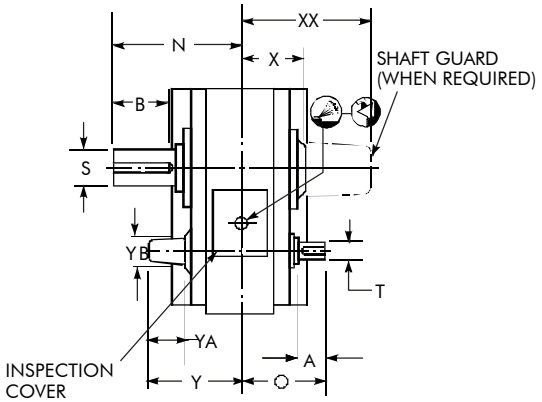


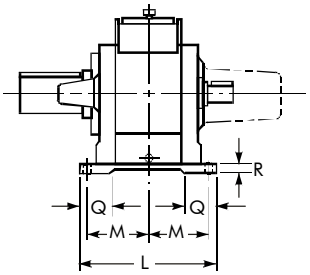


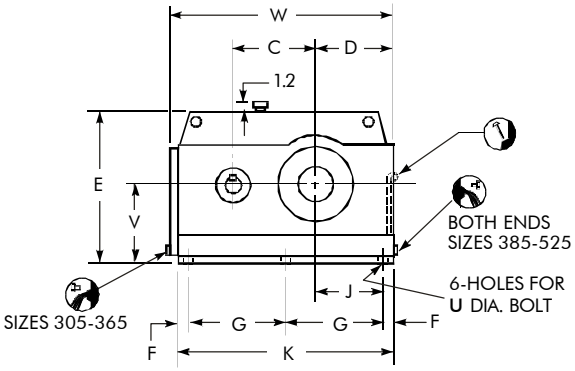


| DRIVE SIZE ★ | A | B | C | D | E | F | G | J | K | L | M | N | O | Q | R | Low Speed Shaft * S | Low Speed Shaft * Key |
|---|---|---|---|---|---|---|---|---|---|---|---|---|---|---|---|---|---|
| **305** | 3.06 | 4.00 | 7.500 | 8.50 | 15.75 | 2.50 | 9.25 | 6.00 | 23.50 | 11.50 | 4.88 | 11.00 | 9.87 | 2.75 | .62 | 2.750 | .625 x .625 x 4.000 |
| **325** | 3.38 | 4.81 | 8.500 | 9.50 | 17.75 | 2.50 | 10.88 | 7.00 | 26.76 | 12.25 | 5.25 | 12.00 | 10.75 | 3.12 | .63 | 3.000 | .750 x .750 x 4.500 |
| **345** | 3.87 | 5.37 | 9.750 | 10.62 | 20.12 | 3.00 | 12.13 | 7.62 | 30.26 | 14.00 | 5.88 | 13.50 | 11.87 | 3.00 | .75 | 3.500 | .875 x .875 x 5.000 |
| **365** | 4.12 | 6.44 | 11.000 | 12.13 | 22.50 | 3.00 | 14.50 | 9.13 | 35.00 | 15.50 | 6.63 | 15.13 | 13.00 | 3.75 | .75 | 4.000 | 1.000 x 1.000 x 6.000 |
| **385** | 7.00 | 7.88 | 9.300 | 10.06 | 20.06 | 1.62 | 12.50 | 8.44 | 28.24 | 23.76 | 10.50 | 19.10 | 18.20 | 5.00 | .94 | 4.500 | 1.000 x 1.000 x 6.500 |
| **405** | 8.00 | 8.66 | 10.500 | 11.20 | 23.00 | 2.00 | 14.00 | 9.20 | 32.00 | 25.30 | 11.25 | 20.60 | 19.60 | 5.50 | 1.06 | 5.000 | 1.250 x 1.250 x 7.500 |
| **425** | 8.50 | 10.06 | 12.000 | 12.74 | 25.00 | 1.62 | 15.75 | 11.12 | 34.74 | 27.50 | 12.25 | 22.90 | 21.20 | 6.00 | 1.06 | 5.750 | 1.500 x 1.500 x 8.000 |
| **445** | 9.00 | 11.38 | 14.000 | 14.50 | 27.70 | 2.50 | 17.50 | 12.00 | 40.00 | 32.20 | 14.60 | 26.30 | 23.70 | 7.00 | 1.20 | 6.500 | 1.500 x 1.500 x 10.000 |
| **465** | 11.00 | 12.68 | 16.000 | 16.50 | 31.00 | 2.50 | 20.50 | 14.00 | 46.00 | 33.00 | 15.00 | 28.60 | 26.20 | 7.00 | 1.26 | 7.250 | 1.750 x 1.500 x 11.000 |
| **485** | 12.00 | 14.88 | 18.000 | 19.00 | 35.00 | 2.50 | 22.25 | 16.00 | 49.50 | 35.00 | 15.40 | 30.70 | 27.10 | 9.00 | 1.50 | 8.500 | 2.000 x 1.500 x 13.000 |
| **505** | 13.00 | 16.18 | 19.500 | 20.50 | 38.00 | 2.75 | 24.00 | 17.25 | 53.50 | 39.50 | 17.25 | 33.60 | 29.80 | 10.26 | 1.75 | 9.250 | 2.500 x 1.750 x 14.000 |
| **525** | 15.00 | 18.38 | 21.000 | 22.50 | 41.00 | 2.50 | 27.25 | 20.00 | 59.50 | 42.00 | 18.50 | 37.20 | 33.20 | 10.50 | 2.10 | 10.500 | 2.500 x 1.750 x 16.000 |

| DRIVE SIZE ★ | Wt-lb | High Speed Shaft * T | High Speed Shaft * Key | U ♦ | V | W | X | XX ● | Y | YA | YB |
|---|---|---|---|---|---|---|---|---|---|---|---|
| **305** | 440 | 2.000 | .500 x .500 x 3.000 | .750 | 8.00 | 24.00 | 6.12 | 12.31 | 10.91 | 5.72 | 3.12 |
| **325** | 560 | 2.125 | .500 x .500 x 3.500 | .750 | 9.00 | 27.13 | 6.75 | 14.17 | 11.34 | 5.72 | 3.12 |
| **345** | 780 | 2.375 | .625 x .625 x 3.750 | 1.000 | 10.25 | 30.62 | 7.37 | 14.62 | 12.75 | 6.58 | 3.75 |
| **365** | 1000 | 2.750 | .625 x .625 x 4.000 | 1.000 | 11.50 | 35.37 | 8.13 | 15.75 | 14.00 | 7.09 | 4.00 |
| **385** | 1340 | 3.500 | .875 x .875 x 6.000 | 1.125 | 9.80 | 28.80 | 9.96 | 21.10 | 19.04 | 9.88 | 5.88 |
| **405** | 1915 | 4.000 | 1.000 x 1.000 x 7.000 | 1.125 | 11.12 | 32.64 | 10.56 | 21.58 | 20.66 | 10.91 | 6.56 |
| **425** | 2640 | 4.250 | 1.000 x 1.000 x 7.500 | 1.250 | 12.50 | 36.00 | 11.78 | 23.78 | 22.60 | 11.82 | 7.28 |
| **445** | 3680 | 4.500 | 1.000 x 1.000 x 8.000 | 1.500 | 14.50 | 41.64 | 13.78 | 27.18 | 24.60 | 11.82 | 7.28 |
| **465** | 4780 | 5.500 | 1.250 x 1.250 x 10.000 | 1.500 | 16.00 | 47.00 | 14.24 | 29.66 | 27.64 | 14.20 | 9.75 |
| **485** | 6430 | 6.000 | 1.500 x 1.500 x 11.000 | 2.000 | 18.00 | 52.50 | 14.36 | 31.24 | 28.26 | 14.80 | 9.31 |
| **505** | 8440 | 6.500 | 1.500 x 1.500 x 12.000 | 2.250 | 19.75 | 56.50 | 15.90 | 34.60 | 30.80 | 15.14 | 10.40 |
| **525** | 11100 | 7.500 | 1.750 x 1.500 x 13.000 | 2.250 | 21.10 | 62.50 | 17.56 | 38.12 | 34.00 | 16.24 | 11.88 |

★ Drawings are representative of this series of drives and do not agree in exact detail for all sizes. Gear drives are for horizontal floor mounted operation unless specifically stated otherwise. Consult Factory for other mountings. Dimensions are for reference only and subject to change without notice unless certified.

♦ Use Grade 5 fasteners for diameters through 1.50". For larger diameter fasteners, use ASTM A-354 Grade BC.

● Single low speed shaft extension is standard; double extension, as indicated with dimension XX, is an extra charge option.

✱ Shaft diameters under 3" are held to limits of +.0000", –.0005". Shaft diameters 3" and over are held to limits of +.000", –.001". Shaft keyseat depth is one-half of key height.


© Rexnord Industries, LLC, 1998, 2009.

# Type A Double Reduction

## Sizes 305-585/Dimensions — Inches

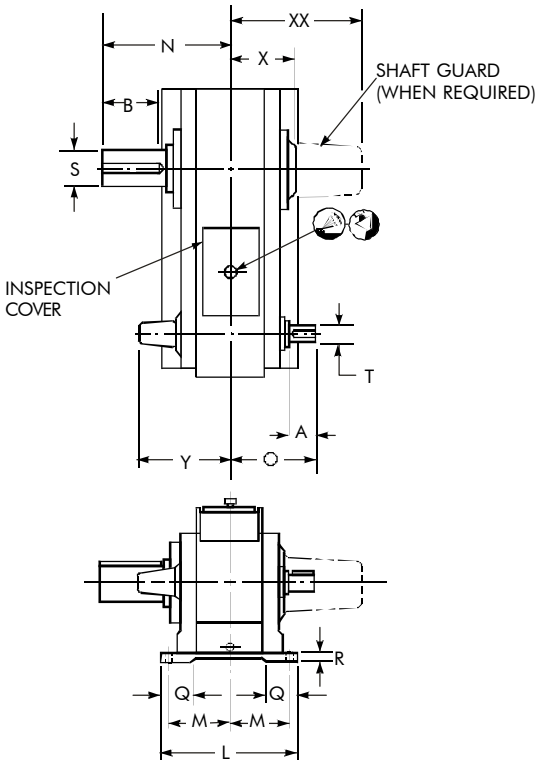


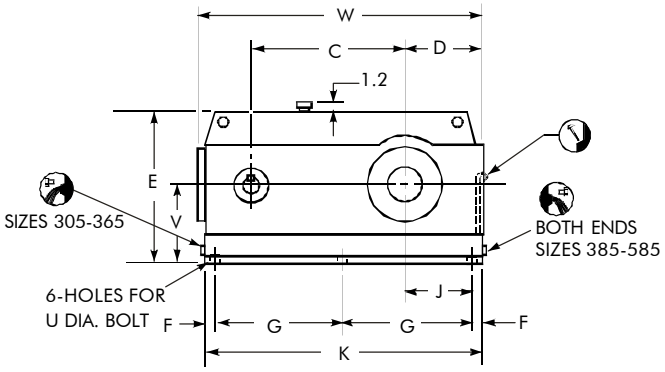


| DRIVE SIZE ★ | A | B | C | D | E | F | G | J | K | L | M | N | O | Q | R | Low Speed Shaft * S | Low Speed Shaft * Key |
|---|---|---|---|---|---|---|---|---|---|---|---|---|---|---|---|---|---|
| **305** | 2.25 | 4.00 | 12.187 | 8.50 | 15.75 | 2.50 | 9.25 | 6.00 | 23.50 | 11.50 | 4.88 | 11.00 | 9.12 | 2.75 | .62 | 2.750 | .625 x .625 x 4.000 |
| **325** | 2.63 | 4.81 | 14.125 | 9.50 | 17.75 | 2.50 | 10.88 | 7.00 | 26.76 | 12.25 | 5.25 | 12.00 | 9.88 | 3.12 | .63 | 3.000 | .750 x .750 x 4.500 |
| **345** | 3.06 | 5.37 | 16.000 | 10.62 | 20.12 | 3.00 | 12.13 | 7.62 | 30.26 | 14.00 | 5.88 | 13.50 | 10.87 | 3.00 | .75 | 3.500 | .875 x .875 x 5.000 |
| **365** | 3.38 | 6.44 | 18.500 | 12.13 | 22.50 | 3.00 | 14.50 | 9.13 | 35.00 | 15.50 | 6.63 | 15.13 | 12.12 | 3.75 | .75 | 4.000 | 1.000 x 1.000 x 6.000 |
| **385** | 4.50 | 7.88 | 15.800 | 10.24 | 18.96 | 1.80 | 16.50 | 8.44 | 36.60 | 21.00 | 9.10 | 17.80 | 14.10 | 5.00 | .94 | 4.500 | 1.000 x 1.000 x 6.500 |
| **405** | 5.00 | 8.66 | 17.700 | 11.20 | 21.32 | 2.00 | 18.40 | 9.20 | 40.80 | 22.80 | 10.00 | 19.40 | 15.20 | 5.50 | 1.06 | 5.000 | 1.250 x 1.250 x 7.500 |
| **425** | 6.00 | 10.06 | 20.200 | 12.74 | 24.00 | 2.75 | 20.00 | 10.00 | 45.50 | 24.80 | 11.00 | 21.60 | 17.20 | 6.00 | 1.06 | 5.750 | 1.500 x 1.500 x 8.000 |
| **445** | 7.00 | 11.38 | 23.300 | 14.50 | 27.70 | 2.50 | 23.25 | 12.00 | 51.50 | 27.40 | 12.20 | 23.90 | 19.30 | 7.00 | 1.20 | 6.500 | 1.500 x 1.500 x 10.000 |
| **465** | 8.00 | 12.68 | 26.500 | 16.50 | 31.00 | 2.50 | 26.50 | 14.00 | 58.00 | 29.00 | 13.00 | 26.60 | 21.20 | 7.00 | 1.26 | 7.250 | 1.750 x 1.500 x 11.000 |
| **485** | 9.00 | 14.88 | 30.000 | 19.00 | 35.00 | 3.50 † | 30.00 † | 15.00 | 58.50 | 33.00 | 14.40 | 30.70 | 23.00 | 8.00 | 1.50 | 8.500 | 2.000 x 1.500 x 13.000 |
| **505** | 10.00 | 16.18 | 33.500 | 20.50 | 38.00 | 2.50 | 34.50 † | 17.50 | 65.00 | 37.00 | 16.00 | 33.60 | 25.60 | 8.80 | 1.75 | 9.250 | 2.500 x 1.750 x 14.000 |
| **525** | 11.00 | 18.38 | 37.000 | 22.50 | 41.00 | 3.00 | 35.50 † | 19.50 | 71.00 | 39.00 | 17.00 | 37.20 | 27.40 | 9.00 | 2.10 | 10.500 | 2.500 x 1.750 x 16.000 |
| **545** | 12.00 | 20.12 | 41.000 | 24.50 | 45.00 | 3.00 | 36.75 | 21.50 | 79.50 | 44.00 | 19.50 | 41.90 | 32.60 | 9.15 | 2.10 | 11.500 | 3.000 x 2.000 x 17.000 |
| **565** | 13.00 | 21.44 | 44.500 | 25.50 | 48.00 | 3.00 | 39.50 | 22.50 | 85.00 | 52.00 | 23.20 | 45.40 | 35.70 | 11.50 | 2.35 | 12.250 | 3.000 x 2.000 x 19.000 |
| **585** | 13.00 | 22.76 | 49.000 | 29.00 | 54.60 | 3.00 | 44.50 | 26.00 | 95.00 | 56.40 | 25.40 | 49.80 | 38.60 | 11.50 | 2.35 | 13.000 | 3.000 x 2.000 x 21.000 |

| DRIVE SIZE ★ | Wt-lb | High Speed Shaft * T | High Speed Shaft * Key | U ♦ | V | W | X | XX ● | Y |
|---|---|---|---|---|---|---|---|---|---|
| **305** | 450 | 1.250 | .250 x .250 x 2.500 | .750 | 8.00 | 24.00 | 6.12 | 12.31 | 9.90 |
| **325** | 580 | 1.500 | .375 x .375 x 2.750 | .750 | 9.00 | 27.13 | 6.75 | 14.17 | 10.28 |
| **345** | 810 | 1.750 | .375 x .375 x 3.000 | 1.000 | 10.25 | 30.62 | 7.37 | 14.62 | 11.75 |
| **365** | 1090 | 2.000 | .500 x .500 x 3.500 | 1.000 | 11.50 | 35.37 | 8.13 | 15.75 | 12.50 |
| **385** | 1510 | 2.250 | .500 x .500 x 4.000 | 1.125 | 9.80 | 37.52 | 8.60 | 19.75 | 15.31 |
| **405** | 1850 | 2.500 | .625 x .625 x 4.000 | 1.125 | 11.12 | 41.20 | 9.32 | 20.34 | 16.00 |
| **425** | 2660 | 3.000 | .750 x .750 x 5.000 | 1.250 | 12.50 | 46.70 | 10.54 | 22.54 | 17.98 |
| **445** | 4030 | 3.500 | .875 x .875 x 6.000 | 1.500 | 14.50 | 53.00 | 11.38 | 24.78 | 20.14 |
| **465** | 5100 | 4.000 | 1.000 x 1.000 x 7.000 | 1.500 | 16.00 | 59.50 | 12.24 | 27.64 | 22.02 |
| **485** | 6300 | 4.500 | 1.000 x 1.000 x 8.000 | 2.000 | 18.00 | 61.12 | 14.36 | 31.24 | 23.90 |
| **505** | 9450 | 5.000 | 1.250 x 1.250 x 9.000 | 2.250 | 19.75 | 67.62 | 15.90 | 34.46 | 26.40 |
| **525** | 12140 | 5.500 | 1.250 x 1.250 x 10.000 | 2.250 | 21.10 | 73.38 | 17.56 | 38.12 | 28.84 |
| **545** | 17800 | 6.000 | 1.500 x 1.500 x 11.000 | 2.250 | 23.00 | 81.88 | 20.10 | 43.00 | 33.64 |
| **565** | 22800 | 6.500 | 1.500 x 1.500 x 12.000 | 2.500 | 25.00 | 87.38 | 22.25 | 46.00 | 36.73 |
| **585** | 31300 | 6.500 | 1.500 x 1.500 x 12.000 | 2.500 | 28.00 | 97.38 | 25.15 | 50.90 | 39.44 |

★ Drawings are representative of this series of drives and do not agree in exact detail for all sizes. Gear drives are for horizontal floor mounted operation unless specifically stated otherwise. Consult Factory for other mountings. Dimensions are for reference only and subject to change without notice unless certified.

† Size 485: high speed end of drive Dimension G = 22.50", F = 2.50". Size 505: high speed end of drive Dimension G = 25.50". Size 525: high speed end of drive Dimension G = 29.50".

♦ Use Grade 5 fasteners for diameters through 1.50". For larger diameter fasteners, use ASTM A-354 Grade BC.

● Single low speed shaft extension is standard; double extension, as indicated with dimension XX, is an extra charge option.

✱ Shaft diameters under 3" are held to limits of +.0000", –.0005". Shaft diameters 3" and over are held to limits of +.000", –.001". Shaft keyseat depth is one-half of key height.

© Rexnord Industries,LLC, 1998, 2009.

# Type A Triple Reduction

## Sizes 305-585/Dimensions — Inches

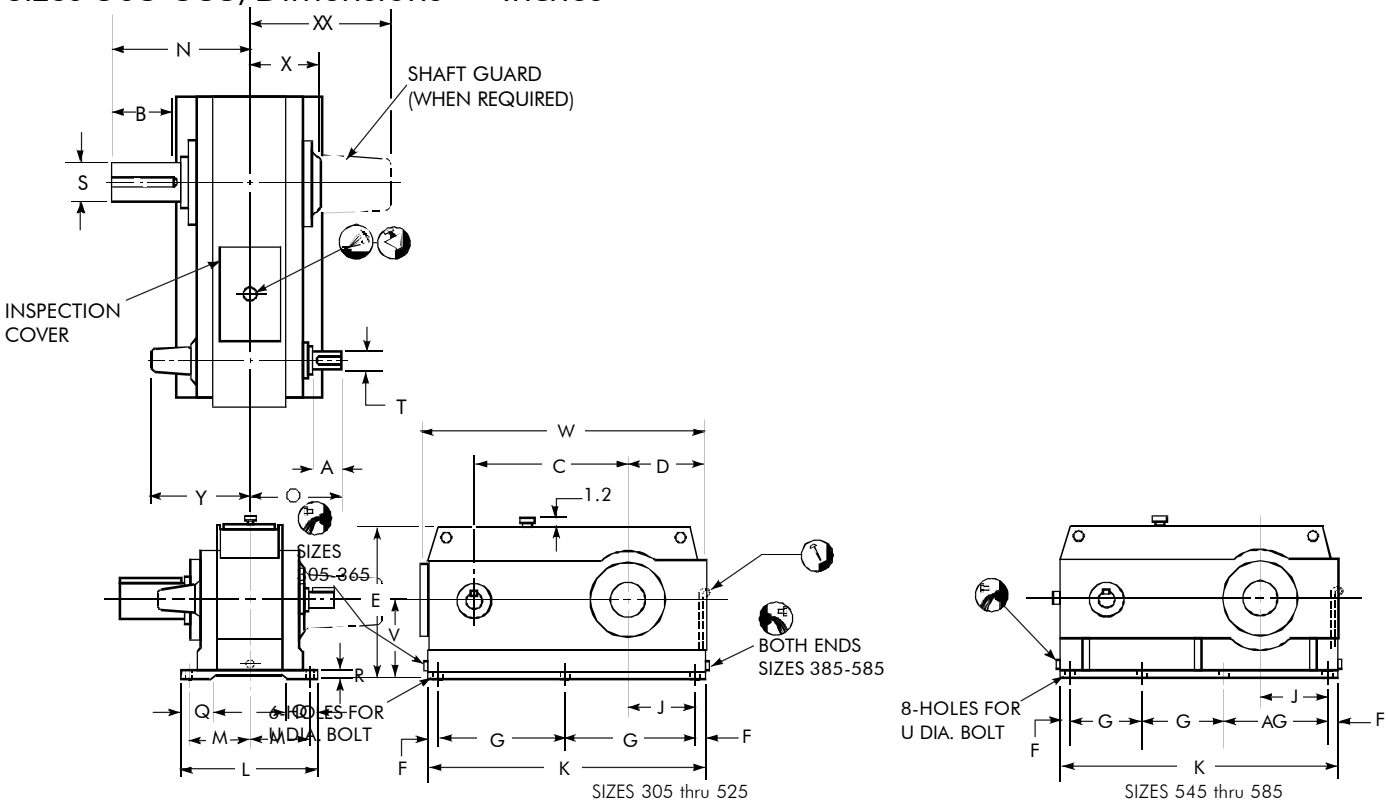


| DRIVE SIZE ★ | A | B | C | D | E | F | G | J | K | L | M | N | O | Q | R | Low Speed Shaft* S | Low Speed Shaft* Key | AG |
|---|---|---|---|---|---|---|---|---|---|---|---|---|---|---|---|---|---|---|
| **305** | 2.06 | 4.00 | 12.187 | 8.50 | 15.75 | 2.50 | 9.25 | 6.00 | 23.50 | 11.50 | 4.88 | 11.00 | 8.75 | 2.75 | .62 | 2.750 | .625 x .625 x 4.000 | |
| **325** | 2.06 | 4.81 | 14.125 | 9.50 | 17.75 | 2.50 | 10.88 | 7.00 | 26.76 | 12.25 | 5.25 | 12.00 | 9.12 | 3.12 | .63 | 3.000 | .750 x .750 x 4.500 | |
| **345** | 2.44 | 5.37 | 16.000 | 10.62 | 20.12 | 3.00 | 12.13 | 7.62 | 30.26 | 14.00 | 5.88 | 13.50 | 10.12 | 3.00 | .75 | 3.500 | .875 x .875 x 5.000 | |
| **365** | 2.44 | 6.44 | 18.500 | 12.13 | 22.50 | 3.00 | 14.50 | 9.13 | 35.00 | 15.50 | 6.63 | 15.13 | 10.87 | 3.75 | .75 | 4.000 | 1.000 x 1.000 x 6.000 | |
| **385** | 3.50 | 7.88 | 21.300 | 10.24 | 18.96 | 1.80 | 16.50 | 8.44 | 36.60 | 21.00 | 9.10 | 17.80 | 12.80 | 5.00 | .94 | 4.500 | 1.000 x 1.000 x 6.500 | |
| **405** | 3.50 | 8.66 | 23.700 | 11.20 | 21.32 | 2.00 | 18.40 | 9.20 | 40.80 | 22.80 | 10.00 | 19.40 | 13.60 | 5.50 | 1.06 | 5.000 | 1.250 x 1.250 x 7.500 | |
| **425** | 4.00 | 10.06 | 26.700 | 12.74 | 24.00 | 2.75 | 20.00 | 10.00 | 45.50 | 24.80 | 11.00 | 21.60 | 15.10 | 6.00 | 1.06 | 5.750 | 1.500 x 1.500 x 8.000 | |
| **445** | 4.50 | 11.38 | 30.500 | 14.50 | 27.70 | 2.50 | 23.25 | 12.00 | 51.50 | 27.40 | 12.20 | 23.90 | 16.60 | 7.00 | 1.20 | 6.500 | 1.500 x 1.500 x 10.000 | |
| **465** | 5.00 | 12.68 | 34.700 | 16.50 | 31.00 | 2.50 | 26.50 | 14.00 | 58.00 | 29.00 | 13.00 | 26.60 | 17.80 | 7.00 | 1.26 | 7.250 | 1.750 x 1.500 x 11.000 | |
| **485** | 6.00 | 14.88 | 39.300 | 19.00 | 35.00 | 3.50 † | 30.00 | 15.00 | 66.00 | 33.00 | 14.40 | 30.70 | 19.80 | 8.00 | 1.50 | 8.500 | 2.000 x 1.500 x 13.000 | |
| **505** | 7.00 | 16.18 | 44.000 | 20.50 | 38.00 | 2.50 † | 34.50 | 17.50 | 74.30 | 37.00 | 16.00 | 33.60 | 22.30 | 8.80 | 1.75 | 9.250 | 2.500 x 1.750 x 14.000 | |
| **525** | 8.00 | 18.38 | 49.000 | 22.50 | 41.00 | 3.00 | 37.25 | 19.50 | 80.50 | 39.00 | 17.00 | 37.20 | 24.20 | 9.00 | 2.10 | 10.500 | 2.500 x 1.750 x 16.000 | |
| **545** | 9.00 | 20.12 | 55.000 | 24.50 | 45.00 | 3.00 | 23.50 | 21.50 | 89.50 | 44.00 | 19.50 | 41.90 | 29.40 | 9.15 | 2.10 | 11.500 | 3.000 x 2.000 x 17.000 | 36.50 |
| **565** | 10.00 | 21.44 | 60.500 | 25.50 | 48.00 | 3.00 | 26.50 | 22.50 | 99.50 | 52.00 | 23.20 | 45.40 | 33.00 | 11.50 | 2.35 | 12.250 | 3.000 x 2.000 x 19.000 | 40.50 |
| **585** | 11.00 | 22.76 | 65.000 | 29.00 | 54.60 | 3.00 | 28.00 | 26.00 | 108.00 | 56.40 | 25.40 | 49.80 | 36.20 | 11.50 | 2.35 | 13.000 | 3.000 x 2.000 x 21.000 | 46.00 |

| DRIVE SIZE ★ | Wt-lb | High Speed Shaft* T | High Speed Shaft* Key | U ♦ | V | W | X | XX ● | Y |
|---|---|---|---|---|---|---|---|---|---|
| **305** | 450 | 1.125 | .250 x .250 x 2.250 | .750 | 8.00 | 24.00 | 6.12 | 12.31 | 9.90 |
| **325** | 580 | 1.125 | .250 x .250 x 2.250 | .750 | 9.00 | 27.13 | 6.75 | 14.17 | 10.28 |
| **345** | 820 | 1.250 | .250 x .250 x 2.500 | 1.000 | 10.25 | 30.62 | 7.37 | 14.62 | 11.75 |
| **365** | 1100 | 1.250 | .250 x .250 x 2.500 | 1.000 | 11.50 | 35.37 | 8.13 | 15.75 | 12.50 |
| **385** | 1520 | 1.750 | .375 x .375 x 3.000 | 1.125 | 9.80 | 37.52 | 8.60 | 19.75 | 13.38 |
| **405** | 1880 | 1.750 | .375 x .375 x 3.000 | 1.125 | 11.12 | 41.20 | 9.32 | 20.34 | 14.30 |
| **425** | 2460 | 2.000 | .500 x .500 x 3.250 | 1.250 | 12.50 | 46.70 | 10.54 | 22.54 | 15.86 |
| **445** | 4070 | 2.250 | .500 x .500 x 4.000 | 1.500 | 14.50 | 53.00 | 11.38 | 24.78 | 17.34 |
| **465** | 5200 | 2.500 | .625 x .625 x 4.500 | 1.500 | 16.00 | 59.50 | 12.24 | 27.64 | 18.62 |
| **485** | 7500 | 3.000 | .750 x .750 x 5.500 | 2.000 | 18.00 | 68.62 | 14.36 | 31.24 | 20.54 |
| **505** | 10100 | 3.500 | .875 x .875 x 6.000 | 2.250 | 19.75 | 76.92 | 15.90 | 34.46 | 23.16 |
| **525** | 13070 | 4.000 | 1.000 x 1.000 x 7.000 | 2.250 | 21.10 | 82.88 | 17.56 | 38.12 | 25.22 |
| **545** | 19300 | 4.500 | 1.000 x 1.000 x 8.000 | 2.250 | 23.00 | 91.88 | 20.10 | 43.00 | 30.33 |
| **565** | 25900 | 5.000 | 1.250 x 1.250 x 9.000 | 2.500 | 25.00 | 101.88 | 22.25 | 46.00 | 35.00 |
| **585** | 33400 | 5.500 | 1.250 x 1.250 x 10.000 | 2.500 | 28.00 | 110.38 | 25.15 | 50.90 | 37.72 |

★ Drawings are representative of this series of drives and do not agree in exact detail for all sizes. Gear drives are for horizontal floor mounted operation unless specifically stated otherwise. Consult Factory for other mountings. Dimensions are for reference only and subject to change without notice unless certified.

† Size 485: high speed end of drive Dimension F = 2.50". Size 505: high speed end of drive Dimension F = 2.80".

♦ Use Grade 5 fasteners for diameters through 1.50". For larger diameter fasteners, use ASTM A-354 Grade BC.

● Single low speed shaft extension is standard; double extension, as indicated with dimension XX, is an extra charge option.

✱ Shaft diameters under 3" are held to limits of +.0000", –.0005". Shaft diameters 3" and over are held to limits of +.000", –.001". Shaft keyseat depth is one-half of key height.


© Rexnord Industries, LLC, 1998, 2009.

# Type A Quadruple Reduction

## Sizes 385-525/Dimensions — Inches

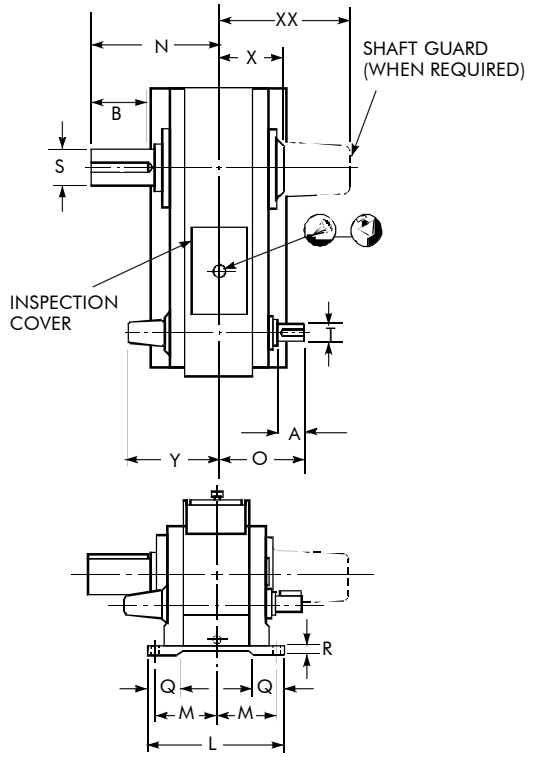


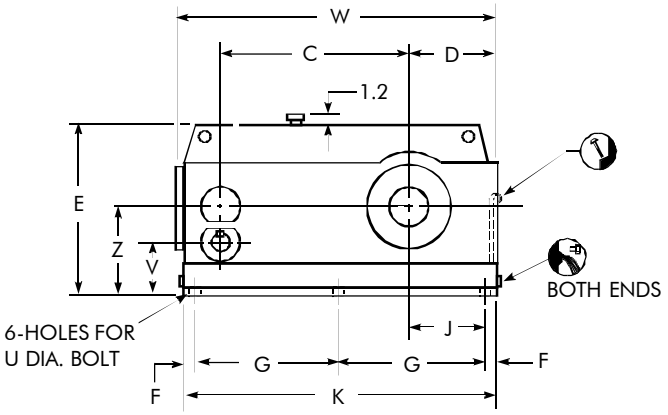


| DRIVE SIZE ★ | A | B | C | D | E | F | G | J | K | L | M | N | O | Q | R | Low Speed Shaft * S | Low Speed Shaft * Key |
|---|---|---|---|---|---|---|---|---|---|---|---|---|---|---|---|---|---|
| **385** | 3.00 | 7.88 | 21.300 | 10.24 | 18.96 | 1.80 | 16.50 | 8.44 | 36.60 | 21.00 | 9.10 | 17.80 | 12.30 | 5.00 | .94 | 4.500 | 1.000 x 1.000 x 6.500 |
| **405** | 3.00 | 8.66 | 23.700 | 11.20 | 21.32 | 2.00 | 18.40 | 9.20 | 40.80 | 22.80 | 10.00 | 19.40 | 13.00 | 5.50 | 1.06 | 5.000 | 1.250 x 1.250 x 7.500 |
| **425** | 3.00 | 10.06 | 26.700 | 12.74 | 24.00 | 2.75 | 20.00 | 10.00 | 45.50 | 24.80 | 11.00 | 21.60 | 13.90 | 6.00 | 1.06 | 5.750 | 1.500 x 1.500 x 8.000 |
| **445** | 3.50 | 11.38 | 30.500 | 14.50 | 27.70 | 2.50 | 23.25 | 12.00 | 51.50 | 27.40 | 12.20 | 23.90 | 15.40 | 7.00 | 1.20 | 6.500 | 1.500 x 1.500 x 10.000 |
| **465** | 3.50 | 12.68 | 34.700 | 16.50 | 31.00 | 2.50 | 26.50 | 14.00 | 58.00 | 29.00 | 13.00 | 26.60 | 16.30 | 7.00 | 1.26 | 7.250 | 1.750 x 1.500 x 11.000 |
| **485** | 4.50 | 14.88 | 39.300 | 19.00 | 35.00 | 3.50 † | 30.00 | 15.00 | 66.00 | 33.00 | 14.40 | 30.70 | 18.30 | 8.00 | 1.50 | 8.500 | 2.000 x 1.500 x 13.000 |
| **505** | 5.50 | 16.18 | 44.000 | 20.50 | 38.00 | 2.50 † | 34.50 | 17.50 | 74.30 | 37.00 | 16.00 | 33.60 | 20.50 | 8.80 | 1.75 | 9.250 | 2.500 x 1.750 x 14.000 |
| **525** | 6.00 | 18.38 | 49.000 | 22.50 | 41.00 | 3.00 | 37.25 | 19.50 | 80.50 | 39.00 | 17.00 | 37.20 | 22.10 | 9.00 | 2.10 | 10.500 | 2.500 x 1.750 x 16.000 |

| DRIVE SIZE ★ | Wt-lb | High Speed Shaft * T | High Speed Shaft * Key | U ♦ | V | W | X | XX ● | Y | Z |
|---|---|---|---|---|---|---|---|---|---|---|
| **385** | 1560 | 1.500 | .375 x .375 x 2.500 | 1.125 | 5.30 | 37.52 | 8.60 | 19.75 | 13.38 | 9.80 |
| **405** | 1900 | 1.500 | .375 x .375 x 2.750 | 1.125 | 6.62 | 41.20 | 9.32 | 20.34 | 14.08 | 11.12 |
| **425** | 2760 | 1.500 | .375 x .375 x 2.500 | 1.250 | 7.00 | 46.70 | 10.54 | 22.54 | 14.98 | 12.50 |
| **445** | 4120 | 1.750 | .375 x .375 x 3.000 | 1.500 | 8.50 | 53.00 | 11.38 | 24.78 | 16.04 | 14.50 |
| **465** | 5300 | 1.750 | .375 x .375 x 3.000 | 1.500 | 9.50 | 59.50 | 12.24 | 27.64 | 17.56 | 16.00 |
| **485** | 7600 | 2.250 | .500 x .500 x 4.000 | 2.000 | 10.80 | 68.62 | 14.36 | 31.24 | 19.04 | 18.00 |
| **505** | 10250 | 2.750 | .625 x .625 x 4.500 | 2.250 | 11.56 | 76.92 | 15.90 | 34.46 | 21.84 | 19.75 |
| **525** | 13260 | 3.000 | .750 x .750 x 5.000 | 2.250 | 12.90 | 82.88 | 17.56 | 38.12 | 22.90 | 21.10 |

★ Drawings are representative of this series of drives and do not agree in exact detail for all sizes. Gear drives are for horizontal floor mounted operation unless specifically stated otherwise. Consult Factory for other mountings. Dimensions are for reference only and subject to change without notice unless certified.

† Size 485: high speed end of drive Dimension F = 2.50". Size 505: high speed end of drive DimensionF = 2.80".

♦ Use Grade 5 fasteners for diameters through 1.50". For larger diameter fasteners, use ASTM A-354 Grade BC.

● Single low speed shaft extension is standard; double extension, as indicated with dimension XX, isan extra charge option.

✱ Shaft diameters under 3" are held to limits of +.0000", –.0005". Shaft diameters 3" and over are held to limits of +.000", –.001". Shaft keyseat depth is one-half of key height.

© Rexnord Industries,LLC, 1998, 2009.

# Type AR Double Reduction
## Sizes 405-485/Dimensions — Inches

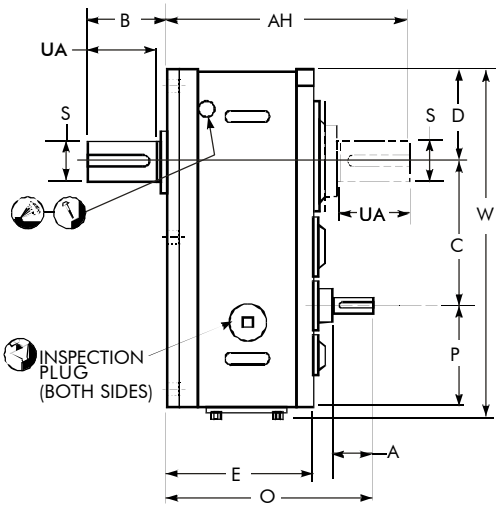


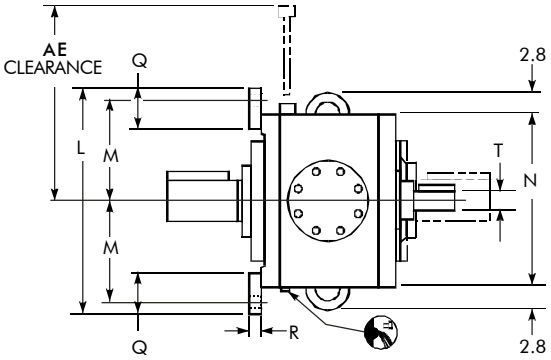


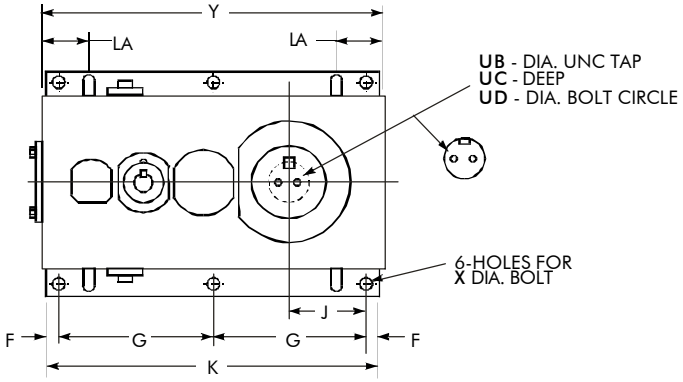


| DRIVE SIZE ★ | A | B | C | D | E | F | G | J | K | L | M | N | O | P | Q | R |
|---|---|---|---|---|---|---|---|---|---|---|---|---|---|---|---|---|
| **405** | 5.00 | 9.70 | 17.700 | 11.31 | 17.65 | 1.50 | 18.50 | 9.20 | 40.00 | 27.75 | 12.50 | 21.62 | 24.90 | 12.11 | 5.00 | 1.50 |
| **425** | 6.00 | 11.00 | 20.200 | 12.31 | 19.45 | 1.50 | 21.00 | 10.25 | 45.00 | 31.80 | 14.50 | 24.62 | 27.80 | 13.50 | 6.00 | 1.60 |
| **445** | 7.00 | 12.20 | 23.300 | 14.62 | 21.41 | 1.75 | 24.00 | 12.25 | 51.50 | 37.00 | 16.75 | 29.25 | 31.00 | 14.75 | 7.00 | 1.81 |
| **465** | 8.00 | 14.00 | 26.500 | 16.62 | 23.16 | 1.95 † | 27.20 | 14.10 | 58.25 | 41.00 | 18.75 | 33.25 | 33.80 | 16.31 | 7.00 | 1.79 |
| **485** | 9.00 | 15.90 | 30.000 | 18.50 | 25.00 | 2.29 | 26.90 | 15.60 | 58.38 | 46.50 | 21.00 | 37.00 | 36.60 | 11.00 | 8.00 | 2.00 |

| DRIVE SIZE ★ | Low Speed Shaft ✱ | | | | | | High Speed Shaft ✱ | | W | X ♦ | Y | AE | AH | LA | Wt-lb |
|---|---|---|---|---|---|---|---|---|---|---|---|---|---|---|---|
| | S | Key | UA | UB | UC | UD | T | Key | | | | | | | |
| **405** | 5.000 | 1.250 x 1.250 x 7.500 | 8.66 | .750 | 1.88 | 3.50 | 2.500 | .625 x .625 x 4.000 | 42.45 | 1.125 | 41.12 | 25.4 | 29.10 | 5.7 | 2360 |
| **425** | 5.750 | 1.500 x 1.500 x 8.000 | 10.06 | 1.125 | 2.25 | 3.50 | 3.000 | .750 x .750 x 5.000 | 47.22 | 1.250 | 46.01 | 28.2 | 32.20 | 6.6 ‡ | 3094 |
| **445** | 6.500 | 1.500 x 1.500 x 10.000 | 11.38 | 1.250 | 2.50 | 4.00 | 3.500 | .875 x .875 x 6.000 | 53.75 | 1.500 | 52.67 | 32.9 | 35.60 | 6.7 | 4334 |
| **465** | 7.250 | 1.750 x 1.500 x 11.000 | 12.68 | 1.250 | 2.50 | 4.75 | 4.000 | 1.000 x 1.000 x 7.000 | 61.11 | 1.500 | 59.43 | 37.4 | 39.20 | 7.7 | 6500 |
| **485** | 8.000 | 2.000 x 1.500 x 12.000 | 14.00 | 1.500 | 3.00 | 5.00 | 4.500 | 1.000 x 1.000 x 8.000 | 60.81 | 2.000 | 59.50 | 40.7 | 43.10 | 9.4 ‡ | 8093 |

★ Gear drives are for horizontal output shaft operation with housing side walls horizontal unless specifically stated otherwise. Consult Factory for other mountings. Dimensions are for reference only and are subject to change without notice unless certified.

♦ Use Grade 5 fasteners for diameters through 1.50". For larger diameter fasteners, use ASTM A-354 Grade BC.

✱ Shaft diameters under 3" are held to limits of +.0000", –.0005". Shaft diameters 3" and over are held to limits of +.000", –.001". Shaft keyseat depth is one-half of key height.

† Size 465 low speed end of drive Dimension F = 1.90.

‡ Size 425 low speed end of drive Dimension LA = 6.7.
Size 485 low speed end of drive Dimension LA = 9.5.


© Rexnord Industries, LLC, 1998, 2009.

# Type AR Double Reduction

## Sizes 505-555/Dimensions — Inches

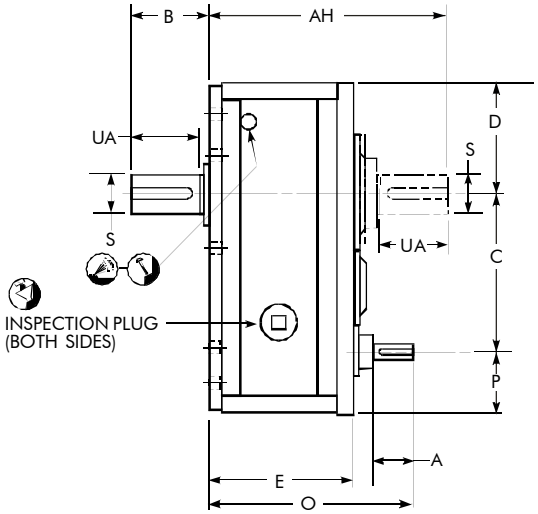


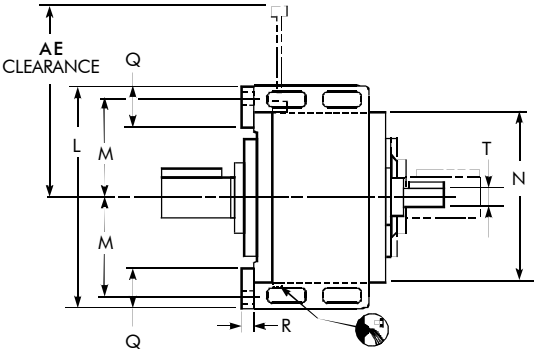


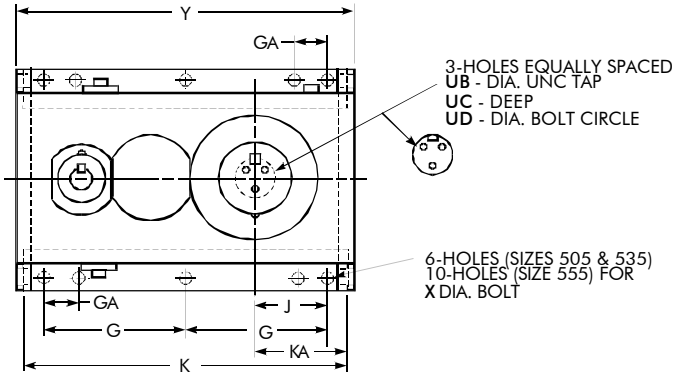


| DRIVE SIZE ★ | A | AE | AH | B | C | D | E | G | GA | J | K | KA | L | M | N |
|---|---|---|---|---|---|---|---|---|---|---|---|---|---|---|---|
| **505** ■ | 10.00 | 43.7 | 47.62 | 17.32 | 33.500 | 19.62 | 27.87 | 27.00 | . . . | 13.50 | 64.62 | 18.88 | 50.50 | 22.75 | 39.25 |
| **535** | 11.00 | 52.2 | 52.00 | 19.50 | 39.000 | 22.62 | 30.00 | 31.75 | . . . | 16.50 | 74.25 | 21.75 | 56.50 | 25.75 | 45.25 |
| **555** | 12.00 | 56.4 | 59.30 | 21.80 | 43.000 | 24.62 | 34.95 | 35.00 | 10.00 | 18.00 | 81.75 | 23.75 | 61.50 | 28.25 | 49.25 |

| DRIVE SIZE ★ | O | P | Q | R | Low Speed Shaft * | | | | | | High Speed Shaft * | | X ♦ | Y | Wt-lb |
|---|---|---|---|---|---|---|---|---|---|---|---|---|---|---|---|
| | | | | | S | Key | UA | UB | UC | UD | T | Key | | | |
| **505** ■ | 40.76 | 13.12 | 10.50 | 2.25 | 9.250 | 2.500 x 1.750 x 14.00 | 16.18 | 1.500 | 3.00 | 6.00 | 5.000 | 1.250 x 1.250 x 9.00 | 2.250 | 66.25 | 11,850 |
| **535** | 43.65 | 14.60 | 10.50 | 2.25 | 10.500 | 2.500 x 1.750 x 16.00 | 18.38 | 1.500 | 3.00 | 7.50 | 5.500 | 1.250 x 1.250 x 10.00 | 2.250 | 76.22 | 16,100 |
| **555** | 49.70 | 16.00 | 12.00 | 2.31 | 11.500 | 3.000 x 2.000 x 17.00 | 20.12 | 1.750 | 3.50 | 8.00 | 6.000 | 1.500 x 1.500 x 11.00 | 2.250 | 83.62 | 22,650 |

★ Gear drives are for horizontal output shaft operation with housing side walls horizontal unless specifically stated otherwise. Consult Factory for other mountings. Dimensions are for reference only and are subject to change without notice unless certified.

♦ Use ASTM A-354 Grade BC fasteners.

✱ Shaft diameters are held to limits of +.000", –.001". Shaft keyseat depth is one-half of key height.

■ Add 1.00" to dimensions K, KA, Y, & D for size 505ARJ drive.

© Rexnord Industries,LLC, 1998, 2009.

# Type AR Triple Reduction
## Sizes 405-485/Dimensions — Inches

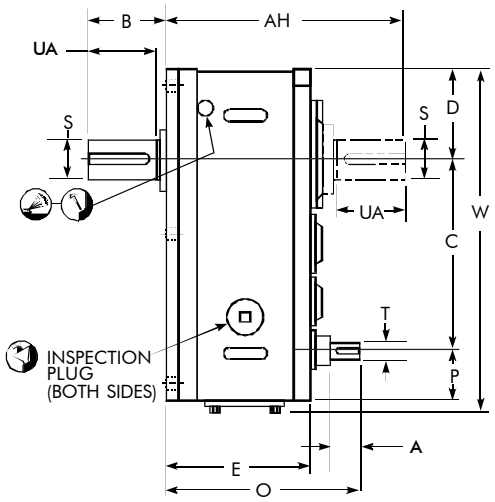


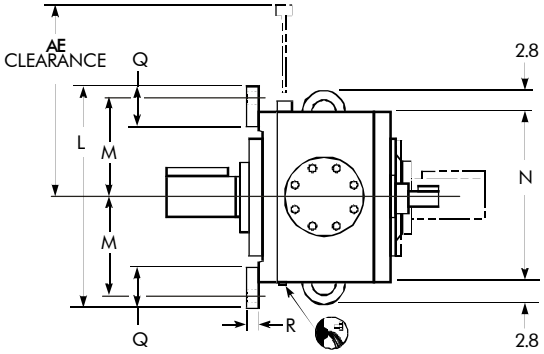


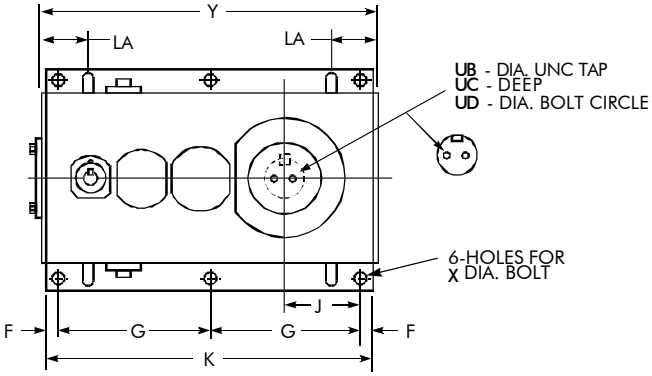


| DRIVE SIZE ★ | A | B | C | D | E | F | G | J | K | L | M | N | O | P | Q | R |
|---|---|---|---|---|---|---|---|---|---|---|---|---|---|---|---|---|
| **405** | 3.50 | 9.70 | 23.700 | 11.31 | 17.65 | 1.50 | 18.50 | 9.20 | 40.00 | 27.75 | 12.50 | 21.62 | 23.30 | 6.11 | 5.00 | 1.50 |
| **425** | 4.00 | 11.00 | 26.700 | 12.31 | 19.45 | 1.50 | 21.00 | 10.25 | 45.00 | 31.80 | 14.50 | 24.62 | 25.70 | 7.00 | 6.00 | 1.60 |
| **445** | 4.50 | 12.20 | 30.500 | 14.62 | 21.41 | 1.75 | 24.00 | 12.25 | 51.50 | 37.00 | 16.75 | 29.25 | 28.30 | 7.55 | 7.00 | 1.81 |
| **465** | 5.00 | 14.00 | 34.700 | 16.62 | 23.16 | 1.95 † | 27.20 | 14.10 | 58.25 | 41.00 | 18.75 | 33.25 | 30.40 | 8.11 | 7.00 | 1.79 |
| **485** | 6.00 | 15.90 | 39.300 | 18.50 | 25.00 | 2.41 † | 30.60 | 15.60 | 65.90 | 46.50 | 21.00 | 37.00 | 33.40 | 9.24 | 8.00 | 2.00 |

| DRIVE SIZE ★ | Low Speed Shaft * | | | | | | High Speed Shaft * | | W | X ♦ | Y | AE | AH | LA | Wt-lb |
|---|---|---|---|---|---|---|---|---|---|---|---|---|---|---|---|
| | S | Key | UA | UB | UC | UD | T | Key | | | | | | | |
| **405** | 5.000 | 1.250 x 1.250 x 7.500 | 8.66 | .750 | 1.88 | 3.50 | 1.750 | .375 x .375 x 3.000 | 42.45 | 1.125 | 41.12 | 25.4 | 29.10 | 5.7 | 2393 |
| **425** | 5.750 | 1.500 x 1.500 x 8.000 | 10.06 | 1.125 | 2.25 | 3.50 | 2.000 | .500 x .500 x 3.250 | 47.22 | 1.250 | 46.01 | 28.2 | 32.20 | 6.6 ‡ | 3159 |
| **445** | 6.500 | 1.500 x 1.500 x 10.000 | 11.38 | 1.250 | 2.50 | 4.00 | 2.250 | .500 x .500 x 4.000 | 53.75 | 1.500 | 52.67 | 32.9 | 35.60 | 6.7 | 4424 |
| **465** | 7.250 | 1.750 x 1.500 x 11.000 | 12.68 | 1.250 | 2.50 | 4.75 | 2.500 | .625 x .625 x 4.500 | 61.11 | 1.500 | 59.43 | 37.4 | 39.20 | 7.7 | 6597 |
| **485** | 8.000 | 2.000 x 1.500 x 12.000 | 14.00 | 1.500 | 3.00 | 5.00 | 3.000 | .750 x .750 x 5.500 | 68.02 | 2.000 | 67.04 | 40.7 | 43.10 | 9.4 ‡ | 8820 |

★ Gear drives are for horizontal output shaft operation with housing side walls horizontal unless specifically stated otherwise. Consult Factory for other mountings. Dimensions are for reference only and are subject to change without notice unless certified.

♦ Use Grade 5 fasteners for diameters through 1.50". For larger diameter fasteners, use ASTM A-354 Grade BC.

✱ Shaft diameters under 3" are held to limits of +.0000", –.0005". Shaft diameters 3" and over are held to limits of +.000", –.001". Shaft keyseat depth is one-half of key height.

† Size 465 low speed end of drive Dimension F = 1.90.
Size 485 low speed end of drive Dimension F = 2.29.

‡ Size 425 low speed end of drive Dimension LA = 6.7.
Size 485 low speed end of drive Dimension LA = 9.5.


© Rexnord Industries, LLC, 1998, 2009.

# Type AR Triple Reduction

## Sizes 505-555/Dimensions — Inches

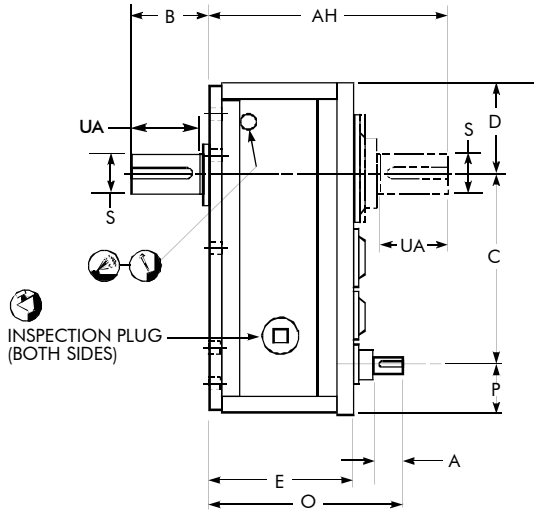


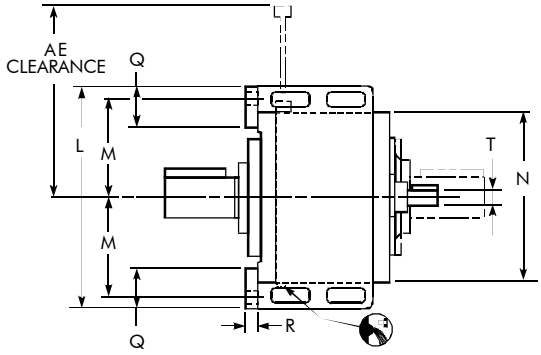


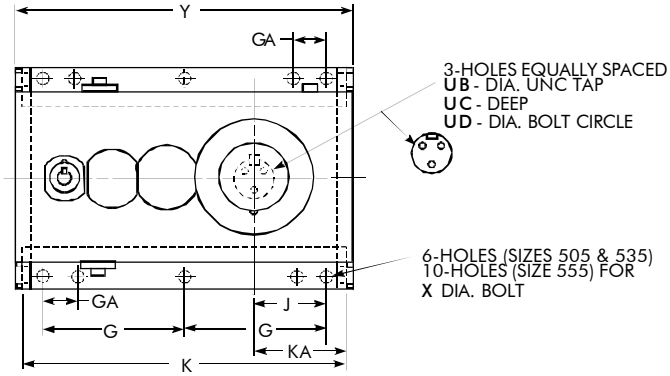


| DRIVE SIZE ★ | A | AE | AH | B | C | D | E | G | GA | J | K | KA | L | M | N |
|---|---|---|---|---|---|---|---|---|---|---|---|---|---|---|---|
| **505** ■ | 7.00 | 43.7 | 47.62 | 17.32 | 44.000 | 19.62 | 27.87 | 31.00 | . . . | 13.50 | 72.90 | 18.88 | 50.50 | 22.75 | 39.25 |
| **535** | 8.00 | 51.0 | 52.00 | 19.50 | 51.000 | 22.62 | 30.00 | 35.75 | . . . | 16.50 | 82.25 | 21.75 | 56.50 | 25.75 | 45.25 |
| **555** | 9.00 | 55.1 | 59.30 | 21.80 | 57.000 | 24.62 | 34.95 | 40.00 | 10.00 | 18.00 | 92.75 | 23.75 | 61.50 | 28.25 | 49.25 |

| DRIVE SIZE ★ | O | P | Q | R | Low Speed Shaft * | | | | | | High Speed Shaft * | | X ♦ | Y | Wt-lb |
|---|---|---|---|---|---|---|---|---|---|---|---|---|---|---|---|
| | | | | | S | Key | UA | UB | UC | UD | T | Key | | | |
| **505** ■ | 37.46 | 10.90 | 10.50 | 2.25 | 9.250 | 2.500 x 1.750 x 14.00 | 16.18 | 1.500 | 3.00 | 6.00 | 3.500 | .875 x .875 x 6.00 | 2.250 | 74.53 | 12,850 |
| **535** | 40.45 | 10.98 | 10.50 | 2.25 | 10.500 | 2.500 x 1.750 x 16.00 | 18.38 | 1.500 | 3.00 | 7.50 | 4.000 | 1.000 x 1.000 x 7.00 | 2.250 | 84.60 | 18,050 |
| **555** | 46.54 | 13.00 | 12.00 | 2.31 | 11.500 | 3.000 x 2.000 x 17.00 | 20.12 | 1.750 | 3.50 | 8.00 | 4.500 | 1.000 x 1.000 x 8.00 | 2.250 | 94.62 | 24,200 |

★ Gear drives are for horizontal output shaft operation with housing side walls horizontal unless specifically stated otherwise. Consult Factory for other mountings. Dimensions are for reference only and are subject to change without notice unless certified.

♦ Use ASTM A-354 Grade BC fasteners.

* Shaft diameters are held to limits of +.000", –.001". Shaft keyseat depth is one-half of key height.

■ Add 1.00" to dimensions K, KA, Y, & D for size 505ARJ drive.

© Rexnord Industries,LLC, 1998, 2009.

# Type AR Quadruple Reduction

## Sizes 405-485/Dimensions — Inches

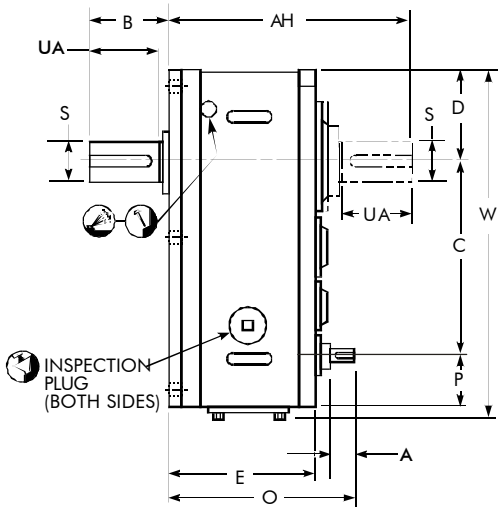


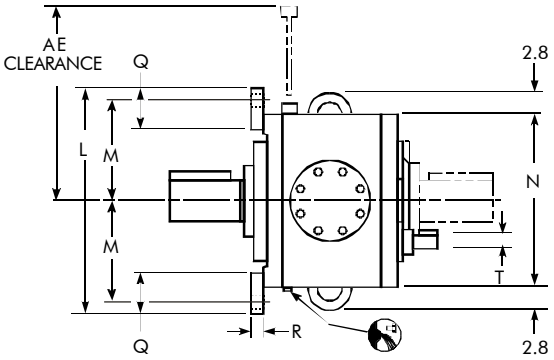


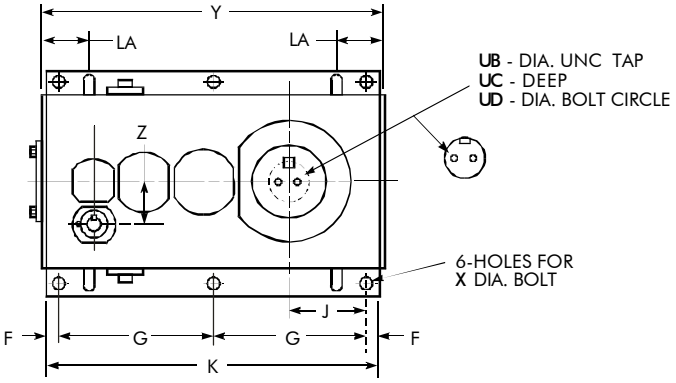


| DRIVE SIZE ★ | A | B | C | D | E | F | G | J | K | L | M | N | O | P | Q | R |
|---|---|---|---|---|---|---|---|---|---|---|---|---|---|---|---|---|
| **405** | 3.00 | 9.70 | 23.700 | 11.31 | 17.65 | 1.50 | 18.50 | 9.20 | 40.00 | 27.75 | 12.50 | 21.62 | 22.70 | 6.11 | 5.00 | 1.50 |
| **425** | 3.00 | 11.00 | 26.700 | 12.31 | 19.45 | 1.50 | 21.00 | 10.25 | 45.00 | 31.80 | 14.50 | 24.62 | 24.50 | 7.00 | 6.00 | 1.60 |
| **445** | 3.50 | 12.20 | 30.500 | 14.62 | 21.41 | 1.75 | 24.00 | 12.25 | 51.50 | 37.00 | 16.75 | 29.25 | 27.10 | 7.55 | 7.00 | 1.81 |
| **465** | 3.50 | 14.00 | 34.700 | 16.62 | 23.16 | 1.95 † | 27.20 | 14.10 | 58.25 | 41.00 | 18.75 | 33.25 | 28.90 | 8.11 | 7.00 | 1.79 |
| **485** | 4.50 | 15.90 | 39.300 | 18.50 | 25.00 | 2.41 † | 30.60 | 15.60 | 65.90 | 46.50 | 21.00 | 37.00 | 31.90 | 9.24 | 8.00 | 2.00 |

| DRIVE SIZE ★ | Low Speed Shaft * | | | | | | High Speed Shaft * | | W | X ♦ | Y | Z | AE | | AH | LA | Wt-lb |
|---|---|---|---|---|---|---|---|---|---|---|---|---|---|---|---|---|---|
| | S | Key | UA | UB | UC | UD | T | Key | | | | | Assy's 1, 3 & 5 | Assy's 2, 4 & 6 | | | |
| **405** | 5.000 | 1.250 x 1.250 x 7.500 | 8.66 | .750 | 1.88 | 3.50 | 1.500 | .375 x .375 x 2.750 | 42.45 | 1.125 | 41.12 | 4.500 | 21.5 | 25.4 | 29.10 | 5.7 | 2375 |
| **425** | 5.750 | 1.500 x 1.500 x 8.000 | 10.06 | 1.125 | 2.25 | 3.50 | 1.500 | .375 x .375 x 2.500 | 47.22 | 1.250 | 46.01 | 5.500 | 23.1 | 28.2 | 32.20 | 6.6 ‡ | 3159 |
| **445** | 6.500 | 1.500 x 1.500 x 10.000 | 11.38 | 1.250 | 2.50 | 4.00 | 1.750 | .375 x .375 x 3.000 | 53.75 | 1.500 | 52.67 | 6.000 | 26.8 | 32.9 | 35.60 | 6.7 | 4495 |
| **465** | 7.250 | 1.750 x 1.500 x 11.000 | 12.68 | 1.250 | 2.50 | 4.75 | 1.750 | .375 x .375 x 3.000 | 61.11 | 1.500 | 59.43 | 6.500 | 30.9 | 37.4 | 39.20 | 7.7 | 6752 |
| **485** | 8.000 | 2.000 x 1.500 x 12.000 | 14.00 | 1.500 | 3.00 | 5.00 | 2.250 | .500 x .500 x 4.000 | 68.02 | 2.000 | 67.04 | 7.200 | 33.3 | 40.7 | 43.10 | 9.4 ‡ | 8960 |

★ Gear drives are for horizontal output shaft operation with housing side walls horizontal unless specifically stated otherwise. Consult Factory for other mountings. Dimensions are for reference only and are subject to change without notice unless certified.

♦ Use Grade 5 fasteners for diameters through 1.50". For larger diameter fasteners, use ASTM A-354 Grade BC.

✱ Shaft diameters under 3" are held to limits of +.0000", –.0005". Shaft diameters 3" and over are held to limits of +.000", –.001". Shaft keyseat depth is one-half of key height.

† Size 465 low speed end of drive Dimension F = 1.90.
Size 485 low speed end of drive Dimension F = 2.29.

‡ Size 425 low speed end of drive Dimension LA = 6.7.
Size 485 low speed end of drive Dimension LA = 9.5.


© Rexnord Industries, LLC, 1998, 2009.

# Type AR Quadruple Reduction

## Sizes 505-555/Dimensions — Inches

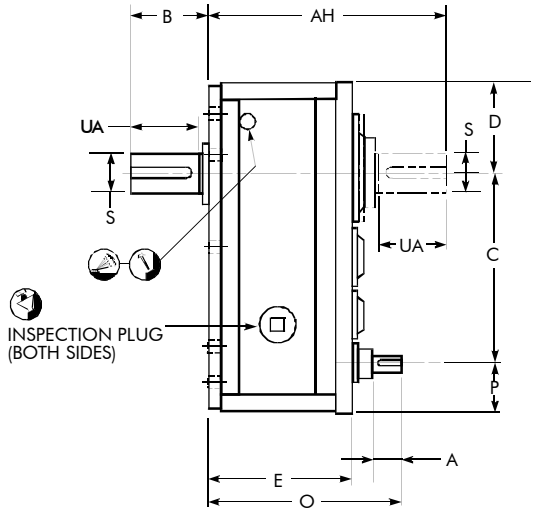


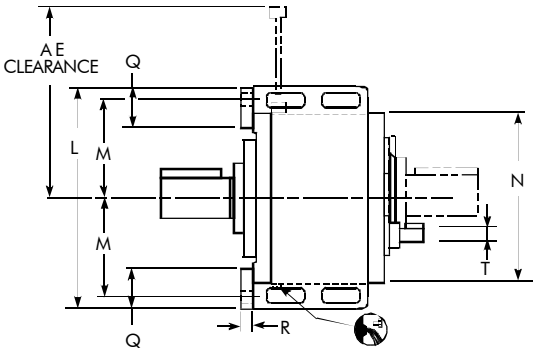


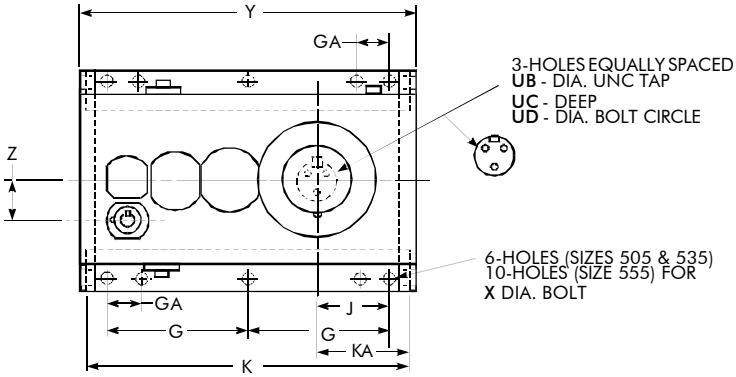


| DRIVE SIZE ★ | A | AE ‡ Assy's 1, 3 & 5 | AE ‡ Assy's 2, 4 & 6 | AH | B | C | D | E | G | GA | J | K | KA | L | M | N |
|---|---|---|---|---|---|---|---|---|---|---|---|---|---|---|---|---|
| **505** ■ | 5.38 | 35.6 | 43.7 | 47.62 | 17.32 | 44.000 | 19.62 | 27.87 | 31.00 | . . . | 13.50 | 72.90 | 18.88 | 50.50 | 22.75 | 39.25 |
| **535** | 6.00 | 42.0 | 50.4 | 52.00 | 19.50 | 51.000 | 22.62 | 30.00 | 35.75 | . . . | 16.50 | 82.25 | 21.75 | 56.50 | 25.75 | 45.25 |
| **555** | 6.00 | 44.8 | 55.1 | 59.30 | 21.80 | 57.000 | 24.62 | 34.95 | 40.00 | 10.00 | 18.00 | 92.75 | 23.75 | 61.50 | 28.25 | 49.25 |

| DRIVE SIZE ★ | O | P | Q | R | Low Speed Shaft * S | Low Speed Shaft * Key | Low Speed Shaft * UA | Low Speed Shaft * UB | Low Speed Shaft * UC | Low Speed Shaft * UD | High Speed Shaft * T | High Speed Shaft * Key | X ♦ | Y | Z | Wt-lb |
|---|---|---|---|---|---|---|---|---|---|---|---|---|---|---|---|---|
| **505** ■ | 35.66 | 10.90 | 10.50 | 2.25 | 9.250 | 2.500 x 1.750 x 14.00 | 16.18 | 1.500 | 3.00 | 6.00 | 2.750 | .625 x .625 x 4.50 | 2.250 | 74.53 | 8.20 | 13,000 |
| **535** | 38.35 | 10.98 | 10.50 | 2.25 | 10.500 | 2.500 x 1.750 x 16.00 | 18.38 | 1.500 | 3.00 | 7.50 | 3.000 | .750 x .750 x 5.00 | 2.250 | 84.60 | 8.20 | 18,200 |
| **555** | 43.33 | 13.00 | 12.00 | 2.31 | 11.500 | 3.000 x 2.000 x 17.00 | 20.12 | 1.750 | 3.50 | 8.00 | 3.000 | .750 x .750 x 5.00 | 2.250 | 94.62 | 9.30 | 23,950 |

★ Gear drives are for horizontal output shaft operation with housing side walls horizontal unless specifically stated otherwise. Consult Factory for other mountings. Dimensions are for reference only and are subject to change without notice unless certified.

♦ Use ASTM A-354 Grade BC fasteners.

✱ Shaft diameters under 3" are held to limits of +.0000", –.0005". Shaft diameters 3" and over are held to limits of +.000", –.001". Shaft keyseat depth is one-half of key height.

■ Add 1.00" to dimensions K, KA, Y, & D for size 505ARJ drive.

‡ For assemblies 1, 3, & 5, high speed shaft is above centerline of drive.

© Rexnord Industries,LLC, 1998, 2009.

# Type ARJ — Hollow Low Speed Shaft – Shrink Disc Mounted
## Double, Triple & Quadruple Reduction

Refer to Pages 51 – 59 for basic gear drive dimensions. Refer to Page 113 for hollow low speed shaft dimensions and driven shaft recommendations and dimensions.

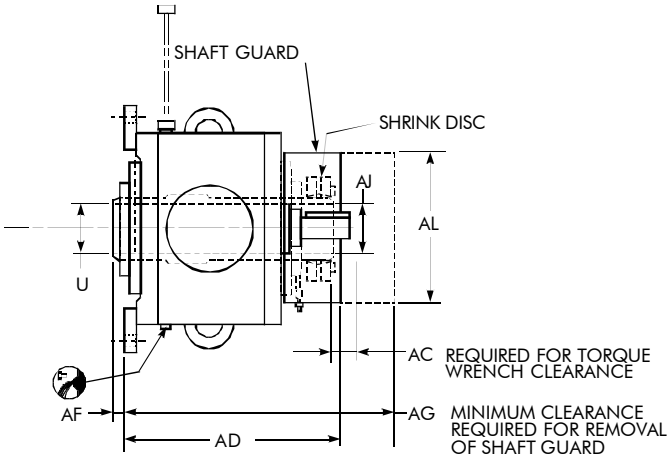


SIZES 405-485

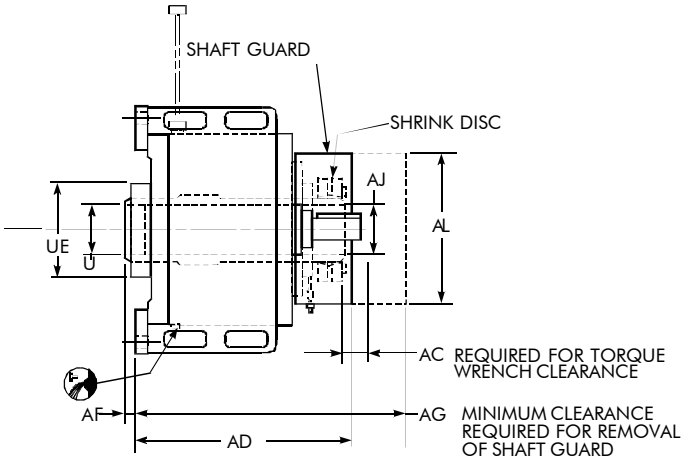


SIZES 505-555

| DRIVE SIZE ★ | U +.002 −.000 | UE | AJ ‡ | AC | AD | AF | AG | AL | Wt-lb Double | Wt-lb Triple | Wt-lb Quad |
|---|---|---|---|---|---|---|---|---|---|---|---|
| **405** | 5.500 | . . . | 5.2505 | 4.00 | 26.51 | 1.20 | 31.96 | 16.72 | 2,360 | 2,390 | 2,375 |
| **425** | 6.250 | . . . | 6.0005 | 4.00 | 29.91 | 1.70 | 37.95 | 17.96 | 3,095 | 3,160 | 3,160 |
| **445** | 6.750 | . . . | 6.5005 | 5.00 | 33.33 | 1.50 | 42.27 | 19.83 | 4,330 | 4,420 | 4,495 |
| **465** | 7.500 | . . . | 7.2505 | 5.00 | 35.60 | 1.50 | 45.16 | 21.33 | 6,500 | 6,595 | 6,750 |
| **485** | 8.750 | . . . | 8.5005 | 5.00 | 38.89 | 1.40 | 49.94 | 24.62 | 8,073 | 8,800 | 8,940 |
| **505** | 10.000 | 24.12 | 9.7505 | 5.00 | 42.55 | 4.17 | 56.10 | 24.33 | 11,650 | 12,800 | 12,950 |
| **535** | 10.750 | 24.12 | 10.5005 | 5.00 | 45.80 | 1.12 | 59.90 | 55.58 | 15,850 | 17,850 | 17,950 |
| **555** | 11.750 | 26.25 | 11.4005 | 5.50 | 52.00 | 2.20 | 67.00 | 27.58 | 22,000 | 23,500 | 23,250 |

★ Dimensions are for reference only and are subject to change without notice unless certified.
‡ Sizes 405-465, tolerance is +.0016, –.0000; Size 485, tolerance is +.0020, –.0000.


© Rexnord Industries, LLC, 1998, 2009.

# Type AXV & AXVQ Double Reduction

## Sizes 405-485/Dimensions — Inches

### Type AXVQ

Refer to Page 114 for dimensions of Hollow Low Speed Shaft with Keeper Plate.

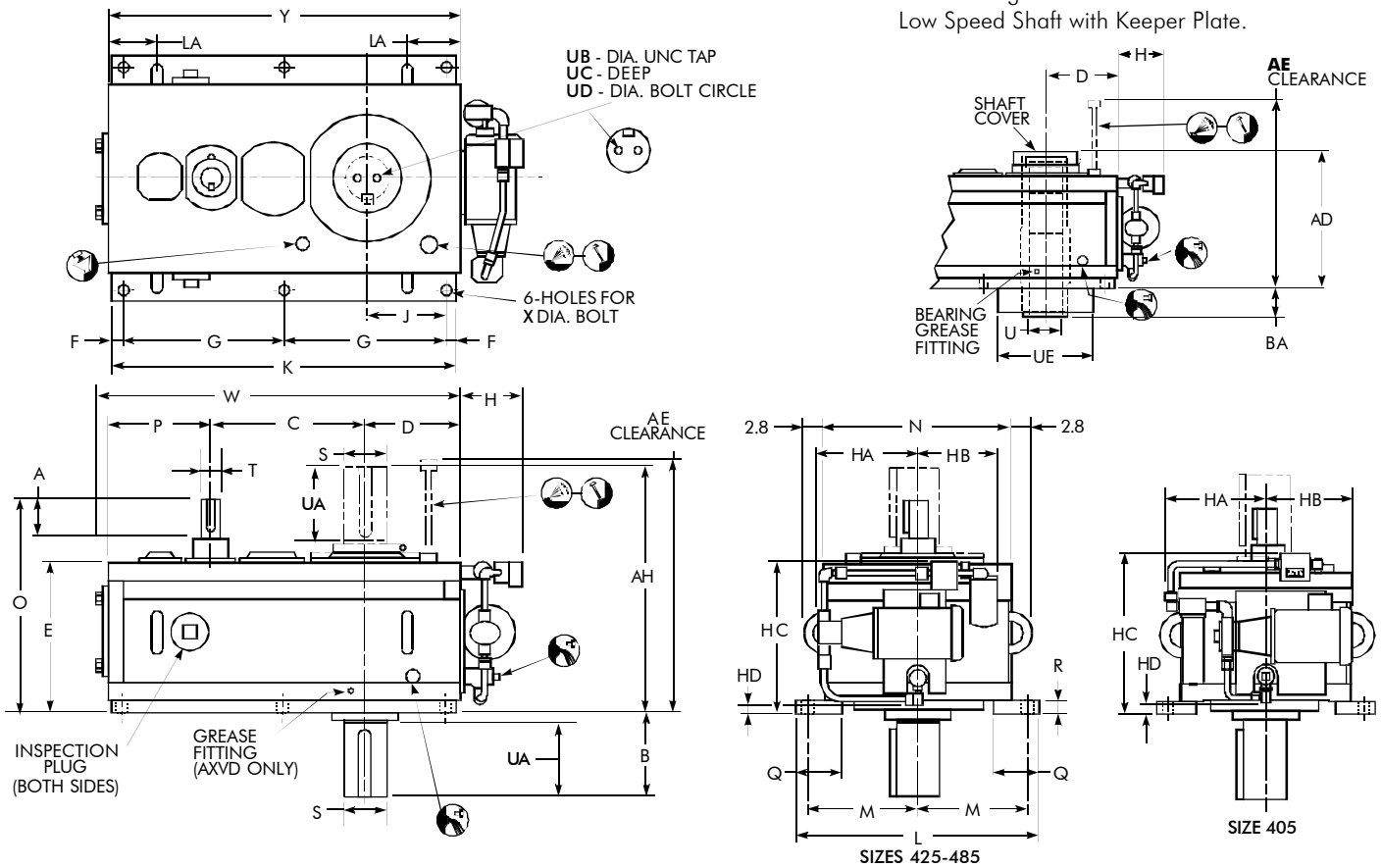


| DRIVE SIZE ★ | A | B | C | D | E | F | G | Lubrication System H | HA | HB | HC | HD | J | K | L | M | N | O | P | Q | R |
|---|---|---|---|---|---|---|---|---|---|---|---|---|---|---|---|---|---|---|---|---|---|
| **405** | 5.00 | 9.70 | 17.700 | 11.31 | 17.65 | 1.50 | 18.50 | 7.47 | 12.71 | 10.88 | 19.99 | 1.25 | 9.20 | 40.00 | 27.75 | 12.50 | 21.62 | 24.90 | 12.11 | 5.00 | 1.50 |
| **425** | 6.00 | 11.00 | 20.200 | 12.31 | 19.45 | 1.50 | 21.00 | 7.65 | 13.19 | 10.03 | 19.57 | 1.35 | 10.25 | 45.00 | 31.80 | 14.50 | 24.62 | 27.80 | 13.50 | 6.00 | 1.60 |
| **445** | 7.00 | 12.20 | 23.300 | 14.62 | 21.41 | 1.75 | 24.00 | 9.92 | 16.88 | 12.09 | 21.42 | 1.18 | 12.25 | 51.50 | 37.00 | 16.75 | 29.25 | 31.00 | 14.50 | 7.00 | 1.81 |
| **465** | 8.00 | 14.00 | 26.500 | 16.62 | 23.16 | 1.95 † | 27.20 | 9.92 | 18.88 | 13.34 | 23.20 | 1.42 | 14.10 | 58.25 | 41.00 | 18.75 | 33.25 | 33.80 | 16.31 | 7.00 | 1.79 |
| **485** | 9.00 | 15.90 | 30.000 | 18.50 | 25.00 | 2.29 | 26.90 | 9.92 | 18.88 | 15.09 | 24.97 | 1.87 | 15.60 | 58.38 | 46.50 | 21.00 | 37.00 | 36.60 | 11.00 | 8.00 | 2.00 |

| DRIVE SIZE ★ | Low Speed Shaft * S | Key | UA | UB | UC | UD | Hollow Low Speed Shaft U +.002 −.000 | UE +.000 −.005 | Keyway | High Speed Shaft * T | Key | W | X ♦ | Y | AD | AE | AH | BA | LA | Wt-lb |
|---|---|---|---|---|---|---|---|---|---|---|---|---|---|---|---|---|---|---|---|---|
| **405** | 5.000 | 1.250 x 1.250 x 7.500 | 8.66 | .750 | 1.88 | 3.50 | 5.375 | 15.249 | 1.000 x .312 | 2.500 | .625 x .625 x 4.000 | 42.45 | 1.125 | 41.12 | 21.34 | 30.6 | 29.10 | 4.50 | 5.7 | 2460 |
| **425** | 5.750 | 1.500 x 1.500 x 8.000 | 10.06 | 1.125 | 2.25 | 3.50 | 6.000 | 15.749 | 1.500 x .265 | 3.000 | .750 x .750 x 5.000 | 47.22 | 1.250 | 46.01 | 23.50 | 33.5 | 32.20 | 4.00 | 6.6 ‡ | 3191 |
| **445** | 6.500 | 1.500 x 1.500 x 10.000 | 11.38 | 1.250 | 2.50 | 4.00 | 6.750 | 18.499 | 1.500 x .510 | 3.500 | .875 x .875 x 6.000 | 53.75 | 1.500 | 52.67 | 25.50 | 36.4 | 35.60 | 4.60 | 6.7 | 4455 |
| **465** | 7.250 | 1.750 x 1.500 x 11.000 | 12.68 | 1.250 | 2.50 | 4.75 | 7.500 | 20.999 | 1.500 x .510 | 4.000 | 1.000 x 1.000 x 7.000 | 61.11 | 1.500 | 59.43 | 27.23 | 39.2 | 39.20 | 4.60 | 7.7 | 6627 |
| **485** | 8.000 | 2.000 x 1.500 x 12.000 | 14.00 | 1.500 | 3.00 | 5.00 | 8.500 | 23.749 | 1.500 x .510 | 4.500 | 1.000 x 1.000 x 8.000 | 60.81 | 2.000 | 59.50 | 29.18 | 41.9 | 43.10 | 5.40 | 9.4 ‡ | 8220 |

★ Gear drives are for horizontal floor mounted operation only (output shaft vertical) unless specifically stated otherwise. Consult factory for other mountings. Dimensions are for reference only and are subject to change without notice unless certified.

♦ Use Grade 5 fasteners for diameters through 1.50". For larger diameter fasteners, use ASTM A-354 Grade BC.

✱ Shaft diameters under 3" are held to limits of +.0000", –.0005". Shaft diameters 3" and over are held to limits of +.000", –.001". Shaft keyseat depth is one-half of key height.

† Size 465 low speed end of drive Dimension F = 1.90.

‡ Size 425 low speed end of drive Dimension LA = 6.7.
Size 485 low speed end of drive Dimension LA = 9.5.

© Rexnord Industries,LLC, 1998, 2009.

# Type AXV & AXVQ Double Reduction

## Sizes 505-555/Dimensions — Inches

### Type AXVQ

Refer to Page 114 for dimensions of Hollow Low Speed Shaft with Keeper Plate.

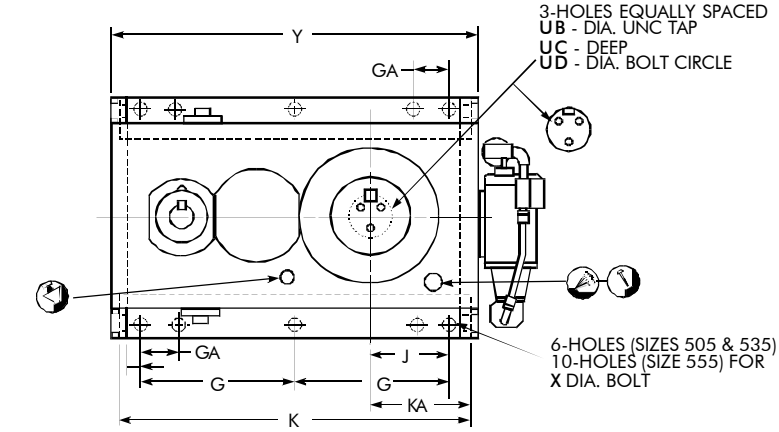


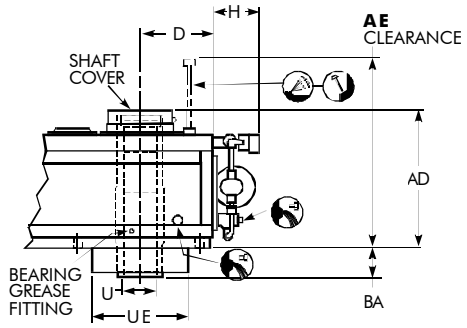


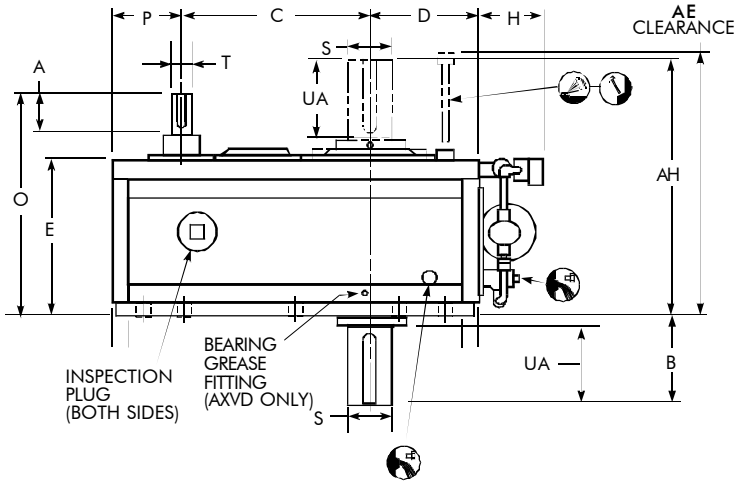


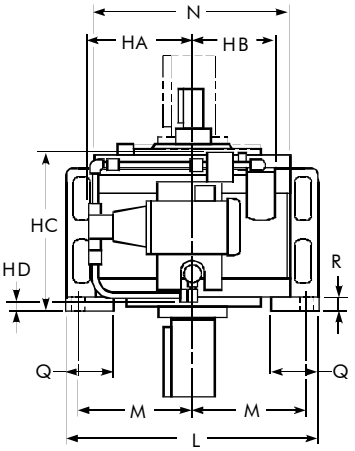


| DRIVE SIZE ★ | A | AD | AE | AH | B | BA | C | D | E | G | GA | Lubrication System H | HA | HB | HC | HD | J | K | KA | L | M |
|---|---|---|---|---|---|---|---|---|---|---|---|---|---|---|---|---|---|---|---|---|---|
| **505** | 10.00 | 33.06 | 47.1 | 47.62 | 17.32 | 6.80 | 33.500 | 19.62 | 27.87 | 27.00 | . . . | 9.91 | 16.82 | 16.34 | 27.67 | 2.80 | 13.50 | 64.62 | 18.88 | 50.50 | 22.75 |
| **535** | 11.00 | 35.18 | 50.8 | 52.00 | 19.50 | 6.80 | 39.000 | 22.62 | 30.00 | 31.75 | . . . | 9.91 | 20.00 | 18.84 | 29.68 | 3.05 | 16.50 | 74.25 | 21.75 | 56.50 | 25.75 |
| **555** | 12.00 | 40.39 | 58.5 | 59.30 | 21.80 | 6.60 | 43.000 | 24.62 | 34.95 | 35.00 | 10.00 | 9.91 | 20.00 | 20.84 | 34.51 | 3.41 | 18.00 | 81.75 | 23.75 | 61.50 | 28.25 |

| DRIVE SIZE ★ | N | O | P | Q | R | Low Speed Shaft * S | Key | UA | UB | UC | UD | Keyed Hollow Low Speed Shaft U +.002 −.000 | UE +.000 −.005 | Keyway | High Speed Shaft * T | Key | X ♦ | Y | Wt-lb AXV | AXVQ |
|---|---|---|---|---|---|---|---|---|---|---|---|---|---|---|---|---|---|---|---|---|
| **505** | 39.25 | 40.76 | 13.12 | 10.50 | 2.25 | 9.250 | 2.500 x 1.750 x 14.00 | 16.18 | 1.500 | 3.00 | 6.00 | 9.001 | 24.999 | 2.000 x .510 | 5.000 | 1.250 x 1.250 x 9.00 | 2.250 | 66.25 | 11,900 | 11,950 |
| **535** | 45.25 | 43.65 | 14.60 | 10.50 | 2.25 | 10.500 | 2.500 x 1.750 x 16.00 | 18.38 | 1.500 | 3.00 | 7.50 | 10.501 | 27.999 | 2.500 x .760 | 5.500 | 1.250 x 1.250 x 10.00 | 2.250 | 76.22 | 16,200 | 16,100 |
| **555** | 49.25 | 49.70 | 16.00 | 12.00 | 2.31 | 11.500 | 3.000 x 2.000 x 17.00 | 20.12 | 1.750 | 3.50 | 8.00 | 11.501 | 28.999 | 3.000 x .760 | 6.000 | 1.500 x 1.500 x 11.00 | 2.250 | 83.62 | 22,800 | 22,400 |

★ Gear drives are for horizontal floor mounted operation only (output shaft vertical) unless specifically stated otherwise. Consult factory for other mountings. Dimensions are for reference only and are subject to change without notice unless certified.

♦ Use ASTM A-354 Grade BC fasteners.

✱ Shaft diameters are held to limits of +.000", –.001". Shaft keyseat depth is one-half of key height.



© Rexnord Industries, LLC, 1998, 2009.

# Type AXV & AXVQ Triple Reduction

## Sizes 405-485/Dimensions — Inches

### Type AXVQ

Refer to Page 114 for dimensions of Hollow Low Speed Shaft with Keeper Plate.

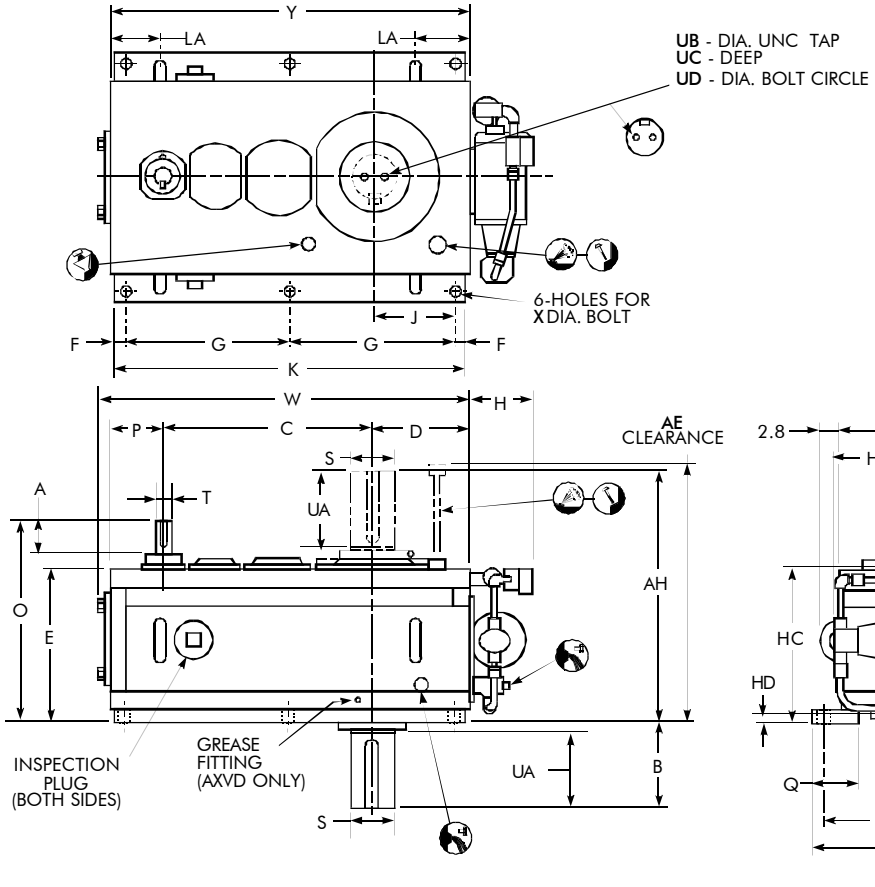


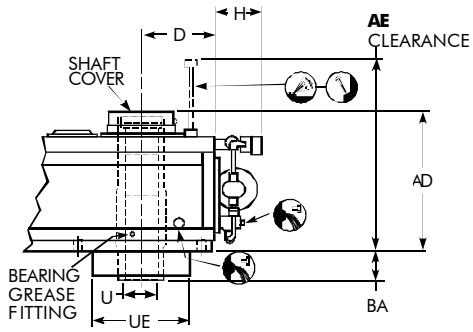


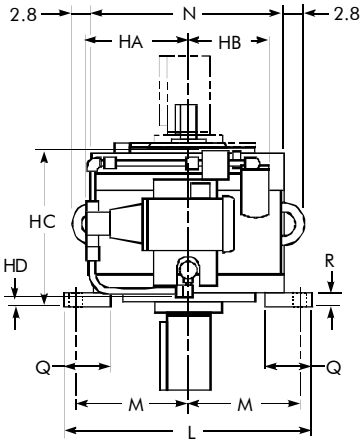


SIZES 425-485

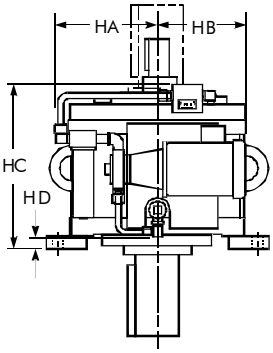


SIZE 405

| DRIVE SIZE ★ | A | B | C | D | E | F | G | Lubrication System H | HA | HB | HC | HD | J | K | L | M | N | O | P | Q | R |
|---|---|---|---|---|---|---|---|---|---|---|---|---|---|---|---|---|---|---|---|---|---|
| **405** | 3.50 | 9.70 | 23.700 | 11.31 | 17.65 | 1.50 | 18.50 | 7.47 | 12.71 | 10.88 | 19.99 | 1.25 | 9.20 | 40.00 | 27.75 | 12.50 | 21.62 | 23.30 | 6.11 | 5.00 | 1.50 |
| **425** | 4.00 | 11.00 | 26.700 | 12.31 | 19.45 | 1.50 | 21.00 | 7.65 | 13.19 | 10.03 | 19.57 | 1.35 | 10.25 | 45.00 | 31.80 | 14.50 | 24.62 | 25.70 | 7.00 | 6.00 | 1.60 |
| **445** | 4.50 | 12.20 | 30.500 | 14.62 | 21.41 | 1.75 | 24.00 | 9.92 | 16.88 | 12.09 | 21.42 | 1.18 | 12.25 | 51.50 | 37.00 | 16.75 | 29.25 | 28.30 | 7.55 | 7.00 | 1.81 |
| **465** | 5.00 | 14.00 | 34.700 | 16.62 | 23.16 | 1.95 † | 27.20 | 9.92 | 18.88 | 13.34 | 23.20 | 1.42 | 14.10 | 58.25 | 41.00 | 18.75 | 33.25 | 30.40 | 8.11 | 7.00 | 1.79 |
| **485** | 6.00 | 15.90 | 39.300 | 18.50 | 25.00 | 2.41 † | 30.60 | 9.92 | 18.88 | 15.09 | 24.97 | 1.87 | 15.60 | 65.90 | 46.50 | 21.00 | 37.00 | 33.40 | 9.24 | 8.00 | 2.00 |

| DRIVE SIZE ★ | Low Speed Shaft * S | Key | UA | UB | UC | UD | Hollow Low Speed Shaft U +.002 −.000 | UE +.000 −.005 | Keyway | High Speed Shaft * T | Key | W | X ♦ | Y | AD | AE | AH | BA | LA | Wt-lb |
|---|---|---|---|---|---|---|---|---|---|---|---|---|---|---|---|---|---|---|---|---|
| **405** | 5.000 | 1.250 x 1.250 x 7.500 | 8.66 | .750 | 1.88 | 3.50 | 5.375 | 15.249 | 1.000 x .312 | 1.750 | .375 x .375 x 3.000 | 42.45 | 1.125 | 41.12 | 21.34 | 30.6 | 29.10 | 4.50 | 5.7 | 2493 |
| **425** | 5.750 | 1.500 x 1.500 x 8.000 | 10.06 | 1.125 | 2.25 | 3.50 | 6.000 | 15.749 | 1.500 x .265 | 2.000 | .500 x .500 x 3.250 | 47.22 | 1.250 | 46.01 | 23.50 | 33.5 | 32.20 | 4.00 | 6.6 ‡ | 3256 |
| **445** | 6.500 | 1.500 x 1.500 x 10.000 | 11.38 | 1.250 | 2.50 | 4.00 | 6.750 | 18.499 | 1.500 x .510 | 2.250 | .500 x .500 x 4.000 | 53.75 | 1.500 | 52.67 | 25.50 | 36.4 | 35.60 | 4.60 | 6.7 | 4545 |
| **465** | 7.250 | 1.750 x 1.500 x 11.000 | 12.68 | 1.250 | 2.50 | 4.75 | 7.500 | 20.999 | 1.500 x .510 | 2.500 | .625 x .625 x 4.500 | 61.11 | 1.500 | 59.43 | 27.23 | 39.2 | 39.20 | 4.60 | 7.7 | 6724 |
| **485** | 8.000 | 2.000 x 1.500 x 12.000 | 14.00 | 1.500 | 3.00 | 5.00 | 8.500 | 23.749 | 1.500 x .510 | 3.000 | .750 x .750 x 5.500 | 68.02 | 2.000 | 67.04 | 29.18 | 41.9 | 43.10 | 5.40 | 9.4 ‡ | 8947 |

★ Gear drives are for horizontal floor mounted operation only (output shaft vertical) unless specifically stated otherwise. Consult Factory for other mountings. Dimensions are for reference only and are subject to change without notice unless certified.

♦ Use Grade 5 fasteners for diameters through 1.50". For larger diameter fasteners, use ASTM A-354 Grade BC.

✱ Shaft diameters under 3" are held to limits of +.0000", –.0005". Shaft diameters 3" and over are held to limits of +.000", –.001". Shaft keyseat depth is one-half of key height.

† Size 465 low speed end of drive Dimension F = 1.90.
Size 485 low speed end of drive Dimension F = 2.29.

‡ Size 425 low speed end of drive Dimension LA = 6.7.
Size 485 low speed end of drive Dimension LA = 9.5.

© Rexnord Industries,LLC, 1998, 2009.

# Type AXV & AXVQ Triple Reduction

## Sizes 505-555/Dimensions — Inches

### Type AXVQ

Refer to Page 114 for dimensions of Hollow Low Speed Shaft with Keeper Plate.

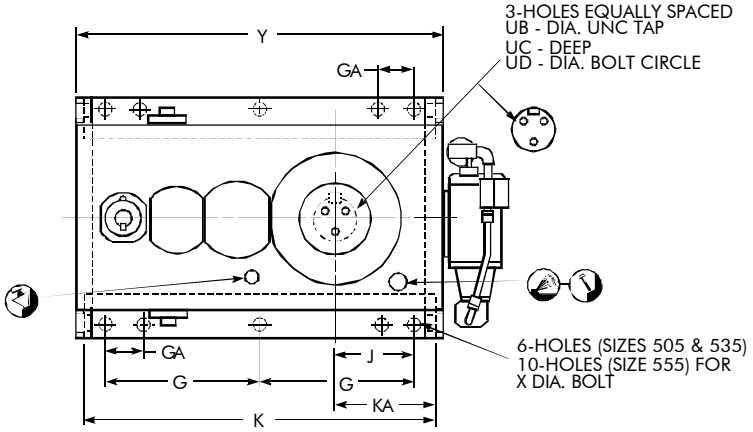


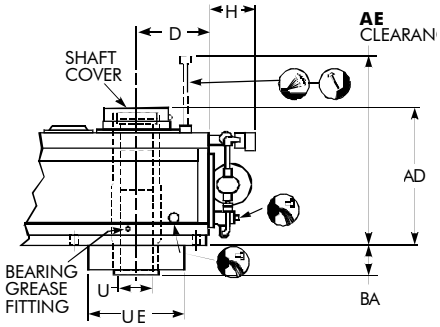


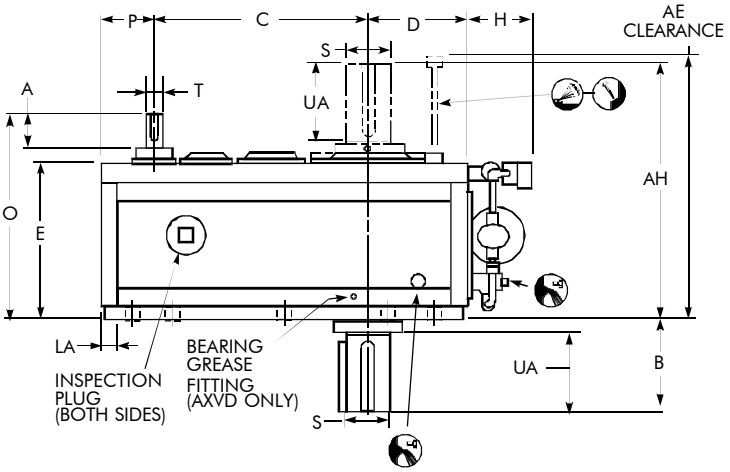


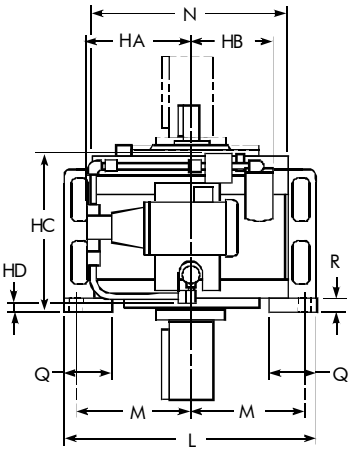


| DRIVE SIZE ★ | A | AD | AE | AH | B | BA | C | D | E | G | GA | Lubrication System H | HA | HB | HC | HD | J | K | KA | L | M |
|---|---|---|---|---|---|---|---|---|---|---|---|---|---|---|---|---|---|---|---|---|---|
| **505** | 7.00 | 33.06 | 47.1 | 47.62 | 17.32 | 6.80 | 44.000 | 19.62 | 27.87 | 31.00 | . . . | 9.91 | 16.82 | 16.34 | 27.67 | 2.80 | 13.50 | 72.90 | 18.88 | 50.50 | 22.75 |
| **535** | 8.00 | 35.18 | 50.8 | 52.00 | 19.50 | 6.80 | 51.000 | 22.62 | 30.00 | 35.75 | . . . | 9.91 | 20.00 | 18.84 | 29.68 | 3.05 | 16.50 | 82.25 | 21.75 | 56.50 | 25.75 |
| **555** | 9.00 | 40.39 | 58.5 | 59.30 | 21.80 | 6.60 | 57.000 | 24.62 | 34.95 | 40.00 | 10.00 | 9.91 | 20.00 | 20.84 | 34.51 | 3.41 | 18.00 | 92.75 | 23.75 | 61.50 | 28.25 |

| DRIVE SIZE ★ | N | O | P | Q | R | Low Speed Shaft * S | Key | UA | UB | UC | UD | Keyed Hollow Low Speed Shaft U +.002 −.000 | UE +.000 −.005 | Keyway | High Speed Shaft * T | Key | X ♦ | Y | Wt-lb AXV | AXVQ |
|---|---|---|---|---|---|---|---|---|---|---|---|---|---|---|---|---|---|---|---|---|
| **505** | 39.25 | 37.46 | 10.90 | 10.50 | 2.25 | 9.250 | 2.500 x 1.750 x 14.00 | 16.18 | 1.500 | 3.00 | 6.00 | 9.001 | 24.999 | 2.000 x .510 | 3.500 | .875 x .875 x 6.00 | 2.250 | 74.53 | 12,950 | 13,000 |
| **535** | 45.25 | 40.45 | 10.98 | 10.50 | 2.25 | 10.500 | 2.500 x 1.750 x 16.00 | 18.38 | 1.500 | 3.00 | 7.50 | 10.501 | 27.999 | 2.500 x .760 | 4.000 | 1.000 x 1.000 x 7.00 | 2.250 | 84.60 | 18,200 | 18,050 |
| **555** | 49.25 | 46.54 | 13.00 | 12.00 | 2.31 | 11.500 | 3.000 x 2.000 x 17.00 | 20.12 | 1.750 | 3.50 | 8.00 | 11.501 | 28.999 | 3.000 x .760 | 4.500 | 1.000 x 1.000 x 8.00 | 2.250 | 94.62 | 24,350 | 23,950 |

★ Gear drives are for horizontal floor mounted operation only (output shaft vertical) unless specifiically stated otherwise. Consult Factory for other mountings. Dimensions are for reference only and are subject to change without notice unless certified.

♦ Use ASTM A-354 Grade BC fasteners.

✱ Shaft diameters are held to limits of +.000", –.001". Shaft keyseat depth is one-half of key height.



© Rexnord Industries, LLC, 1998, 2009.

# Type AXV & AXVQ Quadruple Reduction

## Sizes 405-485/Dimensions — Inches

### Type AXVQ

Refer to Page 114 for dimensions of Hollow Low Speed Shaft with Keeper Plate.

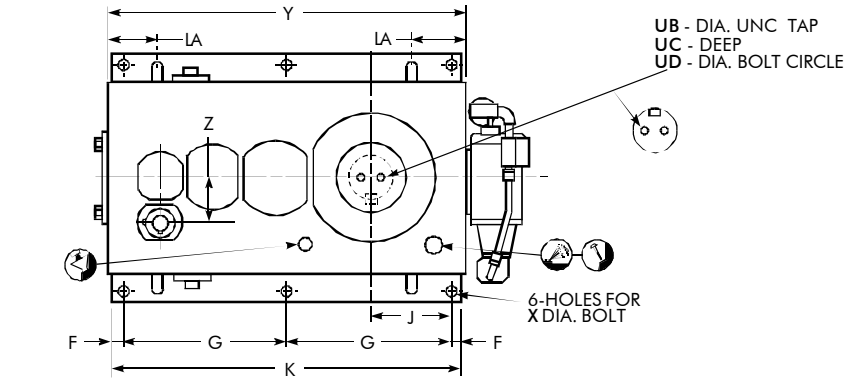


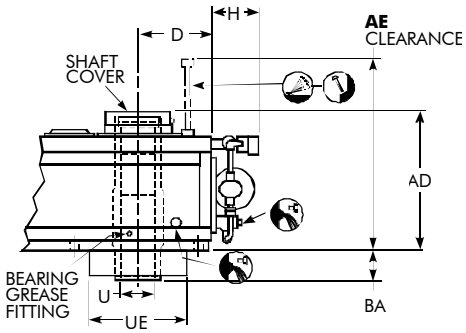


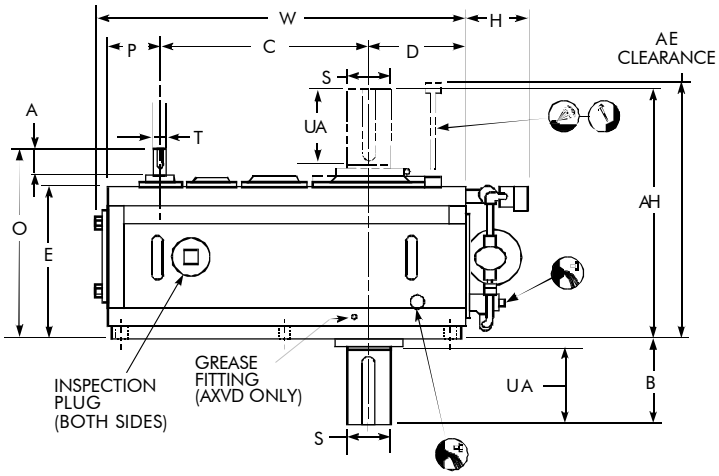


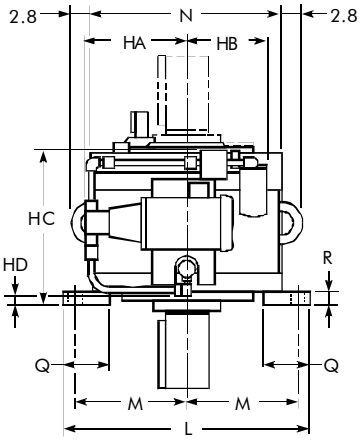


SIZES 425-485

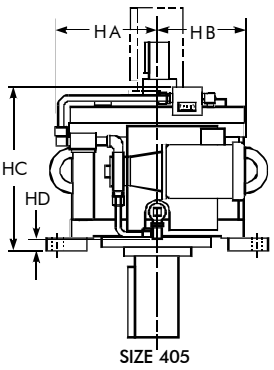


SIZE 405

| DRIVE SIZE ★ | A | B | C | D | E | F | G | Lubrication System H | HA | HB | HC | HD | J | K | L | M | N | O | P | Q | R |
|---|---|---|---|---|---|---|---|---|---|---|---|---|---|---|---|---|---|---|---|---|---|
| **405** | 3.00 | 9.70 | 23.700 | 11.31 | 17.65 | 1.50 | 18.50 | 7.47 | 12.71 | 10.88 | 19.99 | 1.25 | 9.20 | 40.00 | 27.75 | 12.50 | 21.62 | 22.70 | 6.11 | 5.00 | 1.50 |
| **425** | 3.00 | 11.00 | 26.700 | 12.31 | 19.45 | 1.50 | 21.00 | 7.65 | 13.19 | 10.03 | 19.57 | 1.35 | 10.25 | 45.00 | 31.80 | 14.50 | 24.62 | 24.50 | 7.00 | 6.00 | 1.60 |
| **445** | 3.50 | 12.20 | 30.500 | 14.62 | 21.41 | 1.75 | 24.00 | 9.92 | 16.88 | 12.09 | 21.42 | 1.18 | 12.25 | 51.50 | 37.00 | 16.75 | 29.25 | 27.10 | 7.55 | 7.00 | 1.81 |
| **465** | 3.50 | 14.00 | 34.700 | 16.62 | 23.16 | 1.95 † | 27.20 | 9.92 | 18.88 | 13.34 | 23.20 | 1.42 | 14.10 | 58.25 | 41.00 | 18.75 | 33.25 | 28.90 | 8.11 | 7.00 | 1.79 |
| **485** | 4.50 | 15.90 | 39.300 | 18.50 | 25.00 | 2.41 † | 30.60 | 9.92 | 18.88 | 15.09 | 24.97 | 1.87 | 15.60 | 65.90 | 46.50 | 21.00 | 37.00 | 31.90 | 9.24 | 8.00 | 2.00 |

| DRIVE SIZE ★ | Low Speed Shaft * S | Key | UA | UB | UC | UD | Hollow Low Speed Shaft U +.002 −.000 | UE +.000 −.005 | Keyway | High Speed Shaft * T | Key | W | X ♦ | Y | Z | AD | AE | AH | BA | LA | Wt-lb |
|---|---|---|---|---|---|---|---|---|---|---|---|---|---|---|---|---|---|---|---|---|---|
| **405** | 5.000 | 1.250 x 1.250 x 7.500 | 8.66 | .750 | 1.88 | 3.50 | 5.375 | 15.249 | 1.000 x .312 | 1.500 | .375 x .375 x 2.750 | 42.45 | 1.125 | 41.12 | 4.500 | 21.34 | 30.6 | 29.10 | 4.50 | 5.7 | 2475 |
| **425** | 5.750 | 1.500 x 1.500 x 8.000 | 10.06 | 1.125 | 2.25 | 3.50 | 6.000 | 15.749 | 1.500 x .265 | 1.500 | .375 x .375 x 2.500 | 47.22 | 1.250 | 46.01 | 5.500 | 23.50 | 33.5 | 32.20 | 4.00 | 6.6 ‡ | 3256 |
| **445** | 6.500 | 1.500 x 1.500 x 10.000 | 11.38 | 1.250 | 2.50 | 4.00 | 6.750 | 18.499 | 1.500 x .510 | 1.750 | .375 x .375 x 3.000 | 53.75 | 1.500 | 52.67 | 6.000 | 25.50 | 36.4 | 35.60 | 4.60 | 6.7 | 4616 |
| **465** | 7.250 | 1.750 x 1.500 x 11.000 | 12.68 | 1.250 | 2.50 | 4.75 | 7.500 | 20.999 | 1.500 x .510 | 1.750 | .375 x .375 x 3.000 | 61.11 | 1.500 | 59.43 | 6.500 | 27.23 | 39.2 | 39.20 | 4.60 | 7.7 | 6879 |
| **485** | 8.000 | 2.000 x 1.500 x 12.000 | 14.00 | 1.500 | 3.00 | 5.00 | 8.500 | 23.749 | 1.500 x .510 | 2.250 | .500 x .500 x 4.000 | 68.02 | 2.000 | 67.04 | 7.200 | 29.18 | 41.9 | 43.10 | 5.40 | 9.4 ‡ | 9087 |

★ Gear drives are for horizontal floor mounted operation only (output shaft vertical) unless specifically stated otherwise. Consult Factory for other mountings. Dimensions are for reference only and are subject to change without notice unless certified.

♦ Use Grade 5 fasteners for diameters through 1.50". For larger diameter fasteners, use ASTM A-354 Grade BC.

✱ Shaft diameters under 3" are held to limits of +.0000", –.0005". Shaft diameters 3" and over are held to limits of +.000", –.001". Shaft keyseat depth is one-half of key height

† Size 465 low speed end of drive Dimension F = 1.90.
Size 485 low speed end of drive Dimension F = 2.29.

‡ Size 425 low speed end of drive Dimension LA = 6.7.
Size 485 low speed end of drive Dimension LA = 9.5.

© Rexnord Industries,LLC, 1998, 2009.

# Type AXV & AXVQ Quadruple Reduction

## Sizes 505-555/Dimensions — Inches

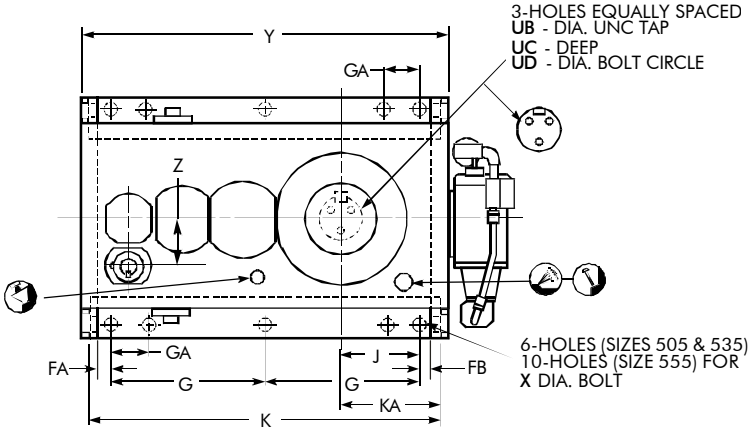


### Type AXVQ

Refer to Page 114 for dimensions of Hollow Low Speed Shaft with Keeper Plate.

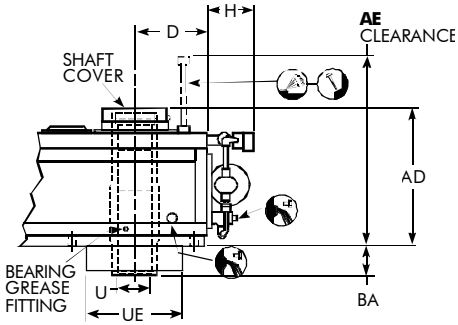


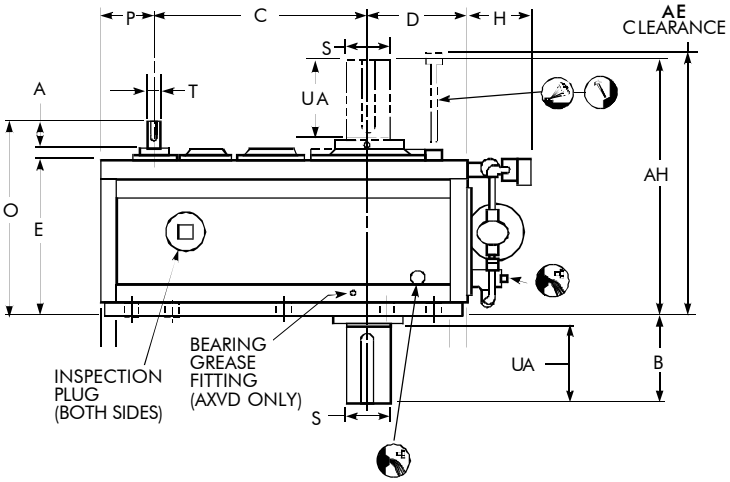


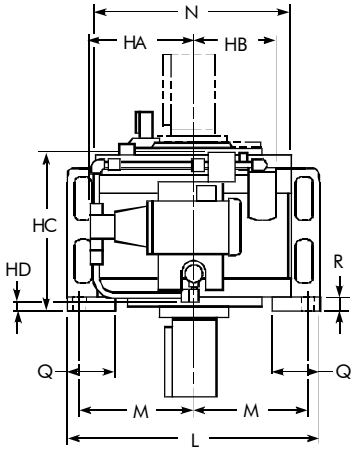


| DRIVE SIZE ★ | A | AD | AE | AH | B | BA | C | D | E | FA | FB | G | GA | Lubrication System | | | | | J | K | KA | L | M |
|---|---|---|---|---|---|---|---|---|---|---|---|---|---|---|---|---|---|---|---|---|---|---|---|
| | | | | | | | | | | | | | | H | HA | HB | HC | HD | | | | | |
| **505** | 5.38 | 33.06 | 47.1 | 47.62 | 17.32 | 6.80 | 44.000 | 19.62 | 27.87 | 3.40 | 3.50 | 31.00 | . . . | 9.91 | 16.82 | 16.34 | 27.67 | 2.80 | 13.50 | 72.90 | 18.88 | 50.50 | 22.75 |
| **535** | 6.00 | 35.18 | 50.8 | 52.00 | 19.50 | 6.80 | 51.000 | 22.62 | 30.00 | 3.73 | 3.50 | 35.75 | . . . | 9.91 | 20.00 | 18.84 | 29.68 | 3.05 | 16.50 | 82.25 | 21.75 | 56.50 | 25.75 |
| **555** | 6.00 | 40.39 | 58.5 | 59.30 | 21.80 | 6.60 | 57.000 | 24.62 | 34.95 | 4.50 | 3.50 | 40.00 | 10.00 | 9.91 | 20.00 | 20.84 | 34.51 | 3.41 | 18.00 | 92.75 | 23.75 | 61.50 | 28.25 |

| DRIVE SIZE ★ | N | O | P | Q | R | Low Speed Shaft * | | | | | | Keyed Hollow Low Speed Shaft | | | High Speed Shaft * | | X♦ | Y | Z | Wt-lb | |
|---|---|---|---|---|---|---|---|---|---|---|---|---|---|---|---|---|---|---|---|---|---|
| | | | | | | S | Key | UA | UB | UC | UD | U +.002 −.000 | UE +.000 −.005 | Keyway | T | Key | | | | AXV | AXVQ |
| **505** | 39.25 | 35.66 | 10.90 | 10.50 | 2.25 | 9.250 | 2.500 x 1.750 x 14.00 | 16.18 | 1.500 | 3.00 | 6.00 | 9.001 | 24.999 | 2.000 x .510 | 2.750 | .625 x .625 x 4.50 | 2.250 | 74.53 | 8.20 | 13,050 | 13,100 |
| **535** | 45.25 | 38.35 | 10.98 | 10.50 | 2.25 | 10.500 | 2.500 x 1.750 x 16.00 | 18.38 | 1.500 | 3.00 | 7.50 | 10.501 | 27.999 | 2.500 x .760 | 3.000 | .750 x .750 x 5.00 | 2.250 | 84.60 | 8.20 | 18,350 | 18,200 |
| **555** | 49.25 | 43.33 | 13.00 | 12.00 | 2.31 | 11.500 | 3.000 x 2.000 x 17.00 | 20.12 | 1.750 | 3.50 | 8.00 | 11.501 | 28.999 | 3.000 x .760 | 3.000 | .750 x .750 x 5.00 | 2.250 | 94.62 | 9.30 | 24,700 | 24,250 |

★ Gear drives are for horizontal floor mounted operation only (output shaft vertical) unless specifically stated otherwise. Consult Factory for other mountings. Dimensions are for reference only and are subject to change without notice unless certified.

♦ Use ASTM A-354 Grade BC fasteners.

✱ Shaft diameters under 3″ are held to limits of +.0000″, –.0005″. Shaft diameters 3″ and over are held to limits of +.000″, –.001″. Shaft keyseat depth is one-half of key height.



© Rexnord Industries, LLC, 1998, 2009.

Type AB

# Shaft Assemblies & Rotations

Please specify from the views below, the desired assembly number. The Type AB low speed shaft overhung load capacities published on Page 84 apply to the low speed shaft extensions below with heavy arrows. Published overhung load capacities may be increased when an outboard bearing is used. Consult Rexnord for overhung load capacities of low speed shaft extensions without the heavy arrow, as they are less than the heavy arrow extensions. Contact Rexnord for inclined, wall mounted, or other non-standard orientations.

## Standard Assemblies

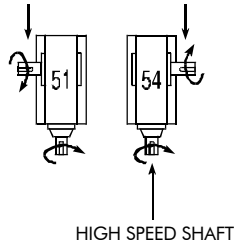


## Other Available Assemblies

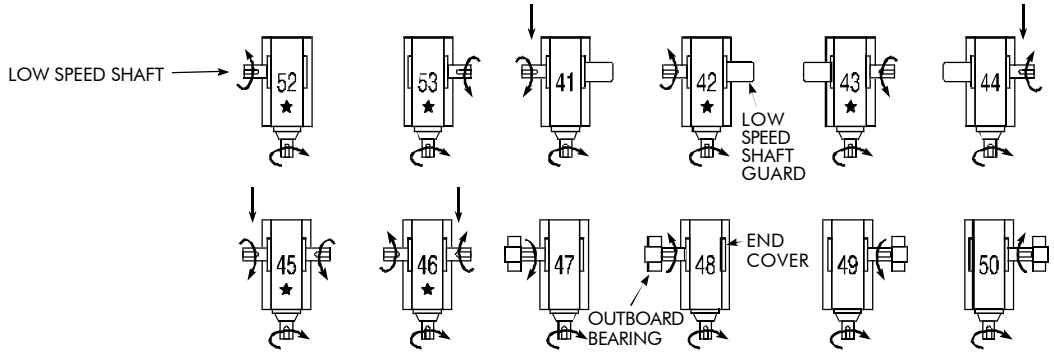


★ Refer to Falk for overhung load ratings for low speed shafts without the heavy arrows and without outboard bearings. They are less than those published.

## Shaft Rotations for AB, ABR, ABRJ Assemblies

AB DOUBLE REDUCTION

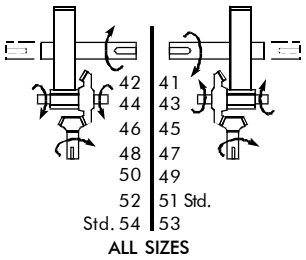


AB, ABR, ABRJ TRIPLE REDUCTION

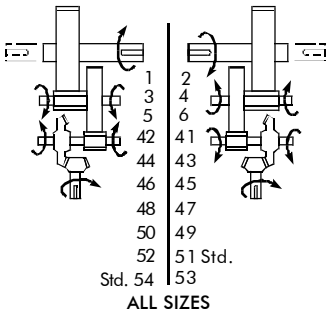


AB, ABR, ABRJ QUADRUPLE REDUCTION

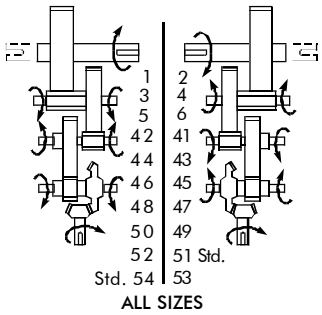


# Types ABR & ABRJ

Please specify from the views below, the desired assembly number. The Type ABR and ABRJ low speed shaft overhung load capacities published on Page 84 apply to the low speed shaft extensions below with heavy arrows. Contact Factory for inclined or other non-standard orientations. For rotations of ABR and ABRJ assemblies, see shaft rotation schematic above.

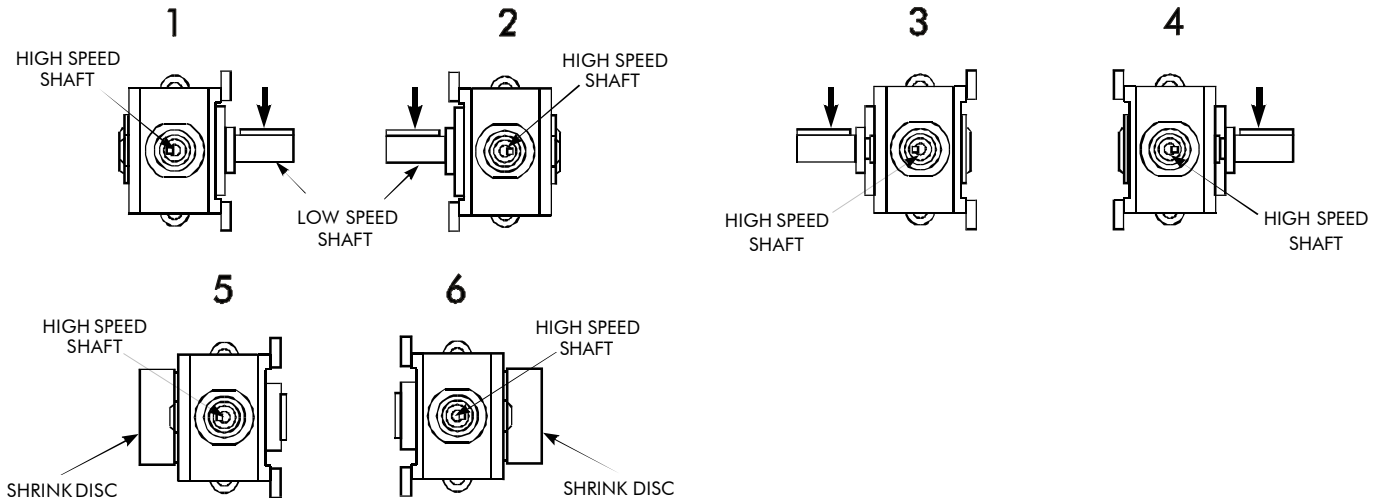


© Rexnord Industries,LLC, 1998, 2009.

# Type AB Right Angle Shaft Horsepower & Torque Ratings/Double Reduction

(TORQUE IS IN POUND-INCHES AT LOW SPEED SHAFT. . . MULTIPLY VALUES LISTED BELOW BY 1000)

| High Speed Shaft rpm | Nominal Ratios ±4% | Approx. Low Speed Shaft rpm | HORSEPOWER | | | | | | | | TORQUE | | | | | | | |
|---|---|---|---|---|---|---|---|---|---|---|---|---|---|---|---|---|---|---|
| | | | DRIVE SIZE | | | | | | | | DRIVE SIZE | | | | | | | |
| | | | 385 | 405 | 425 | 445 | 465 | 485 | 505 | 525 | 385 | 405 | 425 | 445 | 465 | 485 | 505 | 525 |
| 1750 | 5.06 | 350 | 727 | 995 | 1369 | 2055 | 2450 | . . . | . . . | . . . | 127 | 178 | 243 | 391 | 432 | | | |
| | 5.60 | 310 | 709 | 995 | 1369 | 1938 | 2450 | . . . | . . . | . . . | 138 | 197 | 266 | 398 | 479 | | | |
| | 6.20 | 280 | 671 | 995 | 1369 | 1834 | 2384 | . . . | . . . | . . . | 147 | 222 | 306 | 409 | 537 | | | |
| | 6.86 | 255 | 636 | 995 | 1369 | 1674 | 2450 | . . . | . . . | . . . | 151 | 241 | 333 | 406 | 579 | | | |
| | 7.59 | 230 | 600 | 850 | 1259 | 1595 | 2279 | 2608 | . . . | . . . | 155 | 225 | 335 | 449 | 583 | 712 | | |
| | 8.40 | 210 | 435 | 602 | 814 | 1333 | 1834 | 2608 | . . . | . . . | 127 | 173 | 239 | 408 | 548 | 766 | | |
| | 9.30 | 190 | 435 | 602 | 814 | 1268 | 1647 | 2608 | . . . | . . . | 143 | 195 | 275 | 421 | 568 | 883 | | |
| | 10.29 | 170 | 435 | 572 | 809 | 1166 | 1716 | 2608 | . . . | . . . | 155 | 219 | 298 | 421 | 620 | 961 | | |
| | 11.39 | 155 | 419 | 340 | 762 | 1125 | 1579 | 2518 | . . . | . . . | 162 | 134 | 307 | 471 | 618 | 1014 | | |
| | 12.61 | 140 | 251 | 340 | 481 | 792 | 1187 | 1583 | . . . | . . . | 111 | 148 | 212 | 360 | 535 | 698 | | |
| | 13.95 | 125 | 251 | 340 | 481 | 792 | 1163 | 1583 | . . . | . . . | 125 | 167 | 245 | 390 | 605 | 804 | | |
| | 15.44 | 115 | 251 | 340 | 481 | 792 | 1187 | 1562 | . . . | . . . | 136 | 181 | 266 | 425 | 648 | 863 | | |
| | 17.09 | 100 | 251 | 340 | 481 | 774 | 1118 | 1583 | . . . | . . . | 148 | 198 | 291 | 481 | 660 | 957 | | |
| 1430 | 5.06 | 280 | 611 | 839 | 1162 | 1784 | 2107 | . . . | . . . | . . . | 131 | 183 | 253 | 415 | 455 | | | |
| | 5.60 | 255 | 611 | 839 | 1162 | 1683 | 2107 | . . . | . . . | . . . | 146 | 203 | 276 | 423 | 504 | | | |
| | 6.20 | 230 | 582 | 839 | 1162 | 1592 | 2070 | . . . | . . . | . . . | 156 | 229 | 318 | 434 | 571 | | | |
| | 6.86 | 210 | 552 | 839 | 1162 | 1453 | 2107 | . . . | . . . | . . . | 160 | 248 | 346 | 431 | 610 | | | |
| | 7.59 | 190 | 509 | 705 | 1046 | 1350 | 1979 | 2219 | 2766 | 3516 | 161 | 228 | 341 | 465 | 619 | 741 | 931 | 1148 |
| | 8.40 | 170 | 362 | 502 | 681 | 1158 | 1593 | 2219 | 2766 | 3516 | 129 | 176 | 244 | 434 | 582 | 798 | 1001 | 1271 |
| | 9.30 | 155 | 362 | 502 | 681 | 1101 | 1429 | 2219 | 2766 | 3516 | 146 | 199 | 282 | 447 | 603 | 919 | 1163 | 1435 |
| | 10.29 | 140 | 362 | 495 | 681 | 1012 | 1490 | 2219 | 2766 | 3516 | 158 | 232 | 307 | 448 | 659 | 1000 | 1274 | 1554 |
| | 11.39 | 125 | 345 | 282 | 661 | 930 | 1371 | 2186 | 2766 | 3479 | 163 | 136 | 325 | 477 | 656 | 1078 | 1396 | 1682 |
| | 12.61 | 115 | 207 | 282 | 399 | 659 | 992 | 1327 | 1741 | 2277 | 112 | 150 | 215 | 366 | 548 | 716 | 937 | 1241 |
| | 13.95 | 100 | 207 | 282 | 399 | 659 | 992 | 1327 | 1741 | 2277 | 127 | 170 | 248 | 397 | 632 | 824 | 1089 | 1401 |
| | 15.44 | 90 | 207 | 282 | 399 | 659 | 992 | 1327 | 1741 | 2277 | 137 | 184 | 270 | 432 | 663 | 897 | 1192 | 1517 |
| | 17.09 | 84 | 207 | 282 | 399 | 638 | 971 | 1327 | 1741 | 2277 | 149 | 201 | 296 | 485 | 702 | 981 | 1307 | 1660 |
| 1170 | 5.06 | 230 | 512 | 704 | 980 | 1551 | 1794 | . . . | . . . | . . . | 134 | 188 | 260 | 441 | 474 | | | |
| | 5.60 | 210 | 512 | 704 | 980 | 1462 | 1794 | . . . | . . . | . . . | 149 | 208 | 285 | 449 | 524 | | | |
| | 6.20 | 190 | 494 | 704 | 980 | 1384 | 1794 | . . . | . . . | . . . | 162 | 235 | 328 | 461 | 605 | | | |
| | 6.86 | 170 | 479 | 703 | 980 | 1263 | 1794 | . . . | . . . | . . . | 170 | 254 | 357 | 458 | 634 | | | |
| | 7.59 | 155 | 420 | 583 | 867 | 1121 | 1720 | 1874 | 2344 | 2992 | 162 | 231 | 345 | 472 | 658 | 765 | 964 | 1194 |
| | 8.40 | 140 | 301 | 418 | 568 | 972 | 1384 | 1874 | 2344 | 2992 | 132 | 179 | 249 | 445 | 618 | 824 | 1037 | 1322 |
| | 9.30 | 125 | 301 | 418 | 568 | 957 | 1242 | 1874 | 2344 | 2992 | 148 | 202 | 287 | 475 | 640 | 949 | 1205 | 1492 |
| | 10.29 | 115 | 301 | 408 | 568 | 880 | 1294 | 1874 | 2344 | 2992 | 160 | 234 | 313 | 476 | 700 | 1032 | 1319 | 1616 |
| | 11.39 | 100 | 285 | 233 | 568 | 769 | 1191 | 1814 | 2344 | 2992 | 165 | 137 | 342 | 482 | 697 | 1093 | 1446 | 1768 |
| | 12.61 | 90 | 171 | 233 | 331 | 548 | 826 | 1108 | 1456 | 1909 | 114 | 152 | 218 | 372 | 557 | 730 | 958 | 1272 |
| | 13.95 | 84 | 171 | 233 | 331 | 548 | 826 | 1108 | 1456 | 1909 | 128 | 171 | 252 | 404 | 643 | 841 | 1113 | 1435 |
| | 15.44 | 75 | 171 | 233 | 331 | 548 | 826 | 1108 | 1456 | 1909 | 138 | 186 | 274 | 440 | 674 | 916 | 1219 | 1555 |
| | 17.09 | 68 | 171 | 233 | 331 | 525 | 826 | 1108 | 1456 | 1870 | 150 | 203 | 300 | 488 | 729 | 1001 | 1336 | 1666 |


© Rexnord Industries, LLC, 1998, 2009.

# Type AB Right Angle Shaft
# Horsepower & Torque Ratings/Double Reduction

(TORQUE IS IN POUND-INCHES AT LOW SPEED SHAFT. . . MULTIPLY VALUES LISTED BELOW BY 1000)

| High Speed Shaft rpm | Nominal Ratios ±4% | Approx. Low Speed Shaft rpm | HORSEPOWER | | | | | | | | TORQUE | | | | | | | |
|---|---|---|---|---|---|---|---|---|---|---|---|---|---|---|---|---|---|---|
| | | | DRIVE SIZE | | | | | | | | DRIVE SIZE | | | | | | | |
| | | | 385 | 405 | 425 | 445 | 465 | 485 | 505 | 525 | 385 | 405 | 425 | 445 | 465 | 485 | 505 | 525 |
| 870 | 5.06 | 175 | 390 | 538 | 754 | 1212 | 1394 | . . . | . . . | . . . | 137 | 193 | 269 | 464 | 495 | | | |
| | 5.60 | 155 | 383 | 538 | 754 | 1188 | 1394 | . . . | . . . | . . . | 150 | 214 | 294 | 491 | 548 | | | |
| | 6.20 | 140 | 367 | 538 | 754 | 1125 | 1394 | . . . | . . . | . . . | 162 | 242 | 339 | 504 | 632 | | | |
| | 6.86 | 130 | 356 | 530 | 750 | 1026 | 1394 | . . . | . . . | . . . | 170 | 258 | 367 | 501 | 663 | | | |
| | 7.59 | 115 | 316 | 439 | 654 | 847 | 1394 | 1444 | 1813 | 2324 | 164 | 234 | 350 | 479 | 717 | 793 | 1003 | 1247 |
| | 8.40 | 105 | 227 | 316 | 432 | 742 | 1100 | 1444 | 1813 | 2324 | 133 | 182 | 255 | 457 | 661 | 854 | 1078 | 1381 |
| | 9.30 | 95 | 227 | 316 | 432 | 742 | 1010 | 1444 | 1813 | 2324 | 150 | 206 | 294 | 495 | 700 | 983 | 1253 | 1559 |
| | 10.29 | 85 | 227 | 306 | 432 | 715 | 1041 | 1444 | 1813 | 2324 | 163 | 236 | 320 | 520 | 757 | 1070 | 1372 | 1688 |
| | 11.39 | 77 | 213 | 175 | 432 | 578 | 943 | 1349 | 1813 | 2236 | 166 | 139 | 350 | 487 | 742 | 1093 | 1504 | 1777 |
| | 12.61 | 70 | 129 | 175 | 249 | 414 | 627 | 843 | 1111 | 1459 | 115 | 153 | 221 | 378 | 569 | 747 | 983 | 1307 |
| | 13.95 | 62 | 129 | 175 | 249 | 414 | 627 | 843 | 1111 | 1459 | 130 | 173 | 255 | 410 | 656 | 861 | 1142 | 1475 |
| | 15.44 | 55 | 129 | 175 | 249 | 414 | 627 | 843 | 1111 | 1459 | 140 | 188 | 277 | 447 | 688 | 937 | 1250 | 1598 |
| | 17.09 | 50 | 129 | 175 | 249 | 393 | 627 | 843 | 1111 | 1391 | 153 | 205 | 303 | 491 | 745 | 1025 | 1371 | 1666 |
| 720 | 5.06 | 140 | 327 | 451 | 634 | 1023 | 1178 | . . . | . . . | . . . | 139 | 196 | 274 | 473 | 505 | | | |
| | 5.60 | 130 | 317 | 451 | 634 | 1023 | 1159 | . . . | . . . | . . . | 150 | 217 | 299 | 511 | 550 | | | |
| | 6.20 | 115 | 304 | 451 | 634 | 985 | 1178 | . . . | . . . | . . . | 162 | 245 | 345 | 533 | 645 | | | |
| | 6.86 | 105 | 295 | 442 | 621 | 899 | 1178 | . . . | . . . | . . . | 170 | 260 | 368 | 530 | 677 | | | |
| | 7.59 | 95 | 263 | 366 | 545 | 707 | 1178 | 1216 | 1529 | 1964 | 165 | 235 | 353 | 483 | 732 | 807 | 1022 | 1273 |
| | 8.40 | 85 | 190 | 264 | 361 | 622 | 924 | 1216 | 1529 | 1964 | 135 | 184 | 257 | 463 | 671 | 868 | 1099 | 1411 |
| | 9.30 | 77 | 190 | 264 | 361 | 622 | 884 | 1216 | 1529 | 1964 | 152 | 208 | 297 | 502 | 741 | 1000 | 1277 | 1592 |
| | 10.29 | 70 | 190 | 255 | 361 | 622 | 868 | 1216 | 1529 | 1964 | 164 | 238 | 323 | 546 | 763 | 1089 | 1398 | 1724 |
| | 11.39 | 62 | 177 | 146 | 361 | 481 | 786 | 1116 | 1529 | 1850 | 167 | 140 | 353 | 490 | 747 | 1093 | 1532 | 1776 |
| | 12.61 | 55 | 107 | 146 | 208 | 346 | 524 | 705 | 931 | 1224 | 115 | 155 | 223 | 382 | 574 | 755 | 995 | 1325 |
| | 13.95 | 50 | 107 | 146 | 208 | 346 | 524 | 705 | 931 | 1224 | 130 | 175 | 257 | 414 | 663 | 870 | 1156 | 1496 |
| | 15.44 | 45 | 107 | 146 | 208 | 346 | 524 | 705 | 931 | 1224 | 141 | 189 | 280 | 451 | 695 | 947 | 1266 | 1620 |
| | 17.09 | 42 | 107 | 146 | 208 | 327 | 524 | 705 | 931 | 1151 | 153 | 207 | 306 | 494 | 752 | 1035 | 1388 | 1666 |
| 580 | 5.06 | 115 | 265 | 368 | 519 | 839 | 959 | . . . | . . . | . . . | 140 | 198 | 278 | 481 | 511 | | | |
| | 5.60 | 105 | 255 | 368 | 519 | 839 | 933 | . . . | . . . | . . . | 150 | 220 | 304 | 520 | 550 | | | |
| | 6.20 | 95 | 245 | 368 | 518 | 839 | 968 | . . . | . . . | . . . | 162 | 248 | 350 | 564 | 658 | | | |
| | 6.86 | 85 | 237 | 358 | 500 | 773 | 968 | . . . | . . . | . . . | 170 | 261 | 367 | 566 | 691 | | | |
| | 7.59 | 77 | 213 | 296 | 442 | 574 | 961 | 995 | 1253 | 1613 | 166 | 236 | 355 | 487 | 742 | 820 | 1039 | 1298 |
| | 8.40 | 70 | 154 | 215 | 294 | 507 | 755 | 995 | 1253 | 1613 | 136 | 186 | 260 | 468 | 681 | 882 | 1118 | 1438 |
| | 9.30 | 62 | 154 | 215 | 294 | 507 | 755 | 995 | 1253 | 1613 | 153 | 210 | 300 | 508 | 785 | 1016 | 1299 | 1623 |
| | 10.29 | 55 | 154 | 206 | 294 | 507 | 704 | 995 | 1253 | 1607 | 165 | 238 | 326 | 553 | 768 | 1106 | 1422 | 1751 |
| | 11.39 | 50 | 143 | 118 | 294 | 389 | 637 | 899 | 1253 | 1491 | 167 | 140 | 357 | 492 | 752 | 1093 | 1559 | 1777 |
| | 12.61 | 45 | 86.7 | 118 | 168 | 281 | 426 | 574 | 758 | 998 | 116 | 155 | 224 | 385 | 580 | 763 | 1006 | 1341 |
| | 13.95 | 42 | 86.7 | 118 | 168 | 281 | 426 | 574 | 758 | 998 | 131 | 175 | 258 | 418 | 669 | 879 | 1169 | 1514 |
| | 15.44 | 38 | 86.7 | 118 | 168 | 281 | 426 | 574 | 758 | 996 | 141 | 190 | 281 | 455 | 702 | 957 | 1280 | 1636 |
| | 17.09 | 34 | 86.7 | 118 | 168 | 264 | 425 | 574 | 758 | 927 | 154 | 207 | 307 | 495 | 757 | 1047 | 1403 | 1666 |

© Rexnord Industries,LLC, 1998, 2009.

# Type AB, ABR & ABX Right Angle Shaft Horsepower Ratings/Triple Reduction

| High Speed Shaft rpm | Nominal Ratios ±4% | Approx. Low Speed Shaft rpm | DRIVE SIZE 385 | 405 | 425 | 445 | 465 | 485 | 505 | 525 | 535 | 545 | 555 | 565 | 585 |
|---|---|---|---|---|---|---|---|---|---|---|---|---|---|---|---|
| 1750 | 13.95 | 125 | . . . | 314 | 536 | 727 | 995 | 1369 | 2154 | . . . | 2450 | 3436 | . . . | | |
| | 15.44 | 115 | . . . | 314 | 536 | 727 | 995 | 1369 | 2154 | . . . | 2450 | 3436 | 3436 | | |
| | 17.09 | 100 | . . . | 314 | 536 | 727 | 970 | 1369 | 2154 | . . . | 2450 | 3436 | 3436 | | |
| | 18.91 | 90 | 230 | 294 | 467 | 727 | 970 | 1369 | 2154 | 2450 | 2450 | 3436 | 3436 | | |
| | 20.93 | 84 | 218 | 314 | 467 | 675 | 920 | 1369 | 2044 | 2450 | 2450 | 3212 | 3436 | | |
| | 23.16 | 75 | 209 | 294 | 462 | 651 | 859 | 1369 | 2154 | 2450 | 2450 | 3212 | 3436 | | |
| | 25.63 | 68 | 189 | 286 | 418 | 614 | 777 | 1223 | 1921 | 2316 | 2450 | 3212 | 3426 | | |
| | 28.36 | 60 | 145 | 254 | 390 | 526 | 773 | 1207 | 1769 | 2087 | 2301 | 2608 | 3205 † | | |
| | 31.39 | 56 | 141 | 213 | 326 | 436 | 647 | 1112 | 1379 | 1755 | 2087 | 2246 | 2977 † | | |
| | 34.74 | 50 | 141 | 175 | 290 | 435 | 602 | 943 | 1379 | 1755 | 1935 | 2246 | 2608 † | | |
| | 38.44 | 45 | 126 | 175 | 284 | 435 | 599 | 814 | 1305 | 1537 | 1755 | 2202 | 2546 † | | |
| | 42.54 | 40 | 96.5 | 171 | 259 | 371 | 478 | 808 | 1201 | 1383 | 1526 | 2036 | 2151 † | | |
| | 47.08 | 37 | 95.5 | 145 | 240 | 293 | 434 | 743 | 999 | 1187 | 1383 | 1583 | 1982 † | | |
| | 52.11 | 34 | 95.5 | 127 | 186 | 271 | 340 | 630 | 792 | 1187 | 1187 | 1583 | 1583 | | |
| | 57.66 | 30 | 76.4 | 98.2 | 177 | 251 | 340 | 481 | 792 | 1027 | 1187 | 1468 | 1583 † | | |
| | 63.82 | 27 | 64.8 | 98.2 | 167 | 250 | 329 | 481 | 792 | 980 | 1020 | 1357 | 1455 † | | |
| | 70.62 | 25 | 64.7 | 97.6 | 158 | 194 | 298 | 481 | 675 | 816 | 924 | 1061 | 1341 † | | |
| | 78.16 | 22 | 64.7 | | | | | | | | | | | | |
| 1430 | 13.95 | 100 | . . . | 262 | 466 | 611 | 839 | 1162 | 1845 | . . . | 2107 | 2985 | . . . | 3790 | 4673 |
| | 15.44 | 90 | . . . | 262 | 466 | 611 | 839 | 1162 | 1845 | . . . | 2107 | 2985 | 2985 | 3790 | 4673 |
| | 17.09 | 84 | . . . | 262 | 466 | 611 | 839 | 1162 | 1845 | . . . | 2107 | 2985 | 2985 | 3790 | 4673 |
| | 18.91 | 75 | 190 | 243 | 406 | 611 | 839 | 1162 | 1845 | 2107 | 2107 | 2985 | 2985 | 3790 | 4673 |
| | 20.93 | 68 | 178 | 261 | 406 | 586 | 798 | 1162 | 1775 | 2107 | 2107 | 2789 | 2985 | 3790 | 4673 |
| | 23.16 | 60 | 171 | 244 | 377 | 565 | 746 | 1162 | 1784 | 2107 | 2107 | 2789 | 2985 | 3672 | 4156 |
| | 25.63 | 56 | 154 | 236 | 348 | 532 | 675 | 1062 | 1580 | 1907 | 2107 | 2750 | 2974 † | 3326 | 4156 |
| | 28.36 | 50 | 118 | 208 | 318 | 453 | 635 | 992 | 1455 | 1718 | 1894 | 2219 | 2661 † | 3090 | 3384 |
| | 31.39 | 45 | 116 | 176 | 270 | 358 | 531 | 913 | 1160 | 1524 | 1717 | 1950 | 2454 † | 2766 | 3212 |
| | 34.74 | 40 | 116 | 145 | 251 | 362 | 497 | 775 | 1160 | 1524 | 1591 | 1950 | 2177 † | 2485 | 3212 |
| | 38.44 | 37 | 103 | 145 | 232 | 358 | 502 | 681 | 1072 | 1262 | 1524 | 1799 | 2130 † | 2283 | 3025 |
| | 42.54 | 34 | 78.9 | 145 | 212 | 304 | 408 | 663 | 986 | 1136 | 1253 | 1663 | 1771 † | 2092 | 2913 |
| | 47.08 | 30 | 78.5 | 119 | 196 | 240 | 369 | 610 | 819 | 992 | 1136 | 1327 | 1632 † | 1741 | 2277 |
| | 52.11 | 27 | 78.5 | 104 | 153 | 222 | 282 | 517 | 659 | 992 | 992 | 1308 | 1327 | 1671 | 2255 |
| | 57.66 | 25 | 62.9 | 80.6 | 153 | 207 | 282 | 399 | 659 | 842 | 992 | 1200 | 1327 † | 1547 | 2180 |
| | 63.82 | 22 | 52.9 | 80.6 | 140 | 207 | 270 | 399 | 659 | 803 | 836 | 1109 | 1197 † | 1415 | 1961 |
| | 70.62 | 20 | 53.1 | 79.9 | 129 | 159 | 244 | 399 | 552 | 669 | 757 | 870 | 1102 † | 1109 | 1815 |
| | 78.16 | 18 | 53.1 | | | | | | | | | | | | |
| 1170 | 13.95 | 84 | . . . | 217 | 400 | 512 | 704 | 980 | 1566 | . . . | 1794 | 2560 | . . . | 3266 | 4058 |
| | 15.44 | 75 | . . . | 217 | 400 | 512 | 704 | 980 | 1566 | . . . | 1794 | 2560 | 2560 | 3266 | 4058 |
| | 17.09 | 68 | . . . | 217 | 400 | 509 | 704 | 962 | 1566 | . . . | 1794 | 2560 | 2560 | 3266 | 4058 |
| | 18.91 | 60 | 155 | 199 | 353 | 509 | 704 | 962 | 1566 | 1794 | 1794 | 2560 | 2560 | 3266 | 4058 |
| | 20.93 | 56 | 146 | 214 | 333 | 503 | 694 | 962 | 1486 | 1792 | 1794 | 2423 | 2560 | 3266 | 4058 |
| | 23.16 | 50 | 140 | 199 | 309 | 470 | 648 | 962 | 1486 | 1755 | 1755 | 2423 | 2560 | 3191 | 3611 |
| | 25.63 | 45 | 126 | 194 | 285 | 437 | 586 | 884 | 1300 | 1570 | 1755 | 2250 | 2560 † | 2781 | 3611 |
| | 28.36 | 40 | 96.8 | 171 | 261 | 372 | 522 | 816 | 1196 | 1414 | 1560 | 1874 | 2196 † | 2549 | 2940 |
| | 31.39 | 37 | 95.7 | 145 | 222 | 294 | 436 | 751 | 972 | 1324 | 1413 | 1689 | 2024 † | 2317 | 2791 |
| | 34.74 | 34 | 95.7 | 120 | 206 | 301 | 408 | 637 | 972 | 1298 | 1309 | 1605 | 1795 † | 2033 | 2791 |
| | 38.44 | 30 | 84.2 | 120 | 190 | 293 | 415 | 568 | 880 | 1037 | 1288 | 1472 | 1756 † | 1881 | 2628 |
| | 42.54 | 27 | 64.5 | 119 | 173 | 249 | 335 | 544 | 809 | 933 | 1030 | 1361 | 1459 † | 1722 | 2402 |
| | 47.08 | 25 | 64.5 | 97.3 | 161 | 197 | 302 | 500 | 670 | 826 | 933 | 1108 | 1344 † | 1456 | 1909 |
| | 52.11 | 22 | 64.5 | 84.9 | 126 | 182 | 233 | 424 | 548 | 826 | 826 | 1070 | 1108 | 1367 | 1909 |
| | 57.66 | 20 | 51.8 | 66.2 | 125 | 171 | 233 | 331 | 548 | 691 | 826 | 981 | 1108 † | 1265 | 1784 |
| | 63.82 | 18 | 43.3 | 66.2 | 114 | 171 | 221 | 331 | 548 | 659 | 686 | 907 | 985 † | 1158 | 1615 |
| | 70.62 | 16.5 | 43.6 | 65.4 | 106 | 130 | 200 | 331 | 451 | 548 | 621 | 713 | 907 † | 913 | 1494 |
| | 78.16 | 15.0 | 43.6 | | | | | | | | | | | | |

† For Size 555ABRJ (hollow low speed shaft with shrink disc) the hp rating and torque rating are limited by the shrink disc, see Page 77 for instructions.

Triple reduction ratios and ratings in the screened areas are offered for Types ABR and ABX only.

| High Speed Shaft rpm | AVAILABILITY OF TYPES AB / ABR / ABX TRIPLE & QUADRUPLE REDUCTION TYPE | 385 | 405 | 425 | 445 | 465 | 485 | 505 | 525 | 535 | 545 | 555 | 565 | 585 |
|---|---|---|---|---|---|---|---|---|---|---|---|---|---|---|
| All | AB | X | X | X | X | X | X | X | X | . . . | X | . . . | X | X |
| | ABR | . . . | X | X | X | X | X | X | . . . | X | . . . | X | . . . | . . . |
| | ABX | . . . | X | X | X | X | X | X | . . . | X | . . . | X | . . . | . . . |



© Rexnord Industries, LLC, 1998, 2009.

# Type AB, ABR & ABX Right Angle Shaft Torque Ratings/Triple Reduction

(TORQUE IS IN POUND-INCHES AT LOW SPEED SHAFT. . . MULTIPLY VALUES LISTED BELOW BY 1000)

| High Speed Shaft rpm | Nominal Ratios ±4% | Approx. Low Speed Shaft rpm | DRIVE SIZE 385 | 405 | 425 | 445 | 465 | 485 | 505 | 525 | 535 | 545 | 555 | 565 | 585 |
|---|---|---|---|---|---|---|---|---|---|---|---|---|---|---|---|
| 1750 | 13.95 | 125 | . . . | 163 | 264 | 377 | 495 | 698 | 1133 | . . . | 1292 | 1664 | . . . | | |
| | 15.44 | 115 | . . . | 181 | 289 | 407 | 548 | 751 | 1218 | . . . | 1425 | 1811 | 1834 | | |
| | 17.09 | 100 | . . . | 200 | 333 | 441 | 574 | 824 | 14 04 | . . . | 1599 | 2046 | 2029 | | |
| | 18.91 | 90 | 156 | 197 | 310 | 476 | 635 | 887 | 1510 | 1757 | 1758 | 2236 | 2292 | | |
| | 20.93 | 84 | 166 | 245 | 358 | 522 | 695 | 1021 | 1561 | 1903 | 1973 | 2370 | 2499 | | |
| | 23.16 | 75 | 172 | 236 | 385 | 535 | 703 | 1111 | 1770 | 1988 | 2036 | 2591 | 2786 | | |
| | 25.63 | 68 | 168 | 259 | 379 | 547 | 734 | 1149 | 1834 | 2121 | 2246 | 2899 | 3088 | | |
| | 28.36 | 60 | 152 | 249 | 388 | 553 | 766 | 1235 | 1839 | 2070 | 2366 | 2594 | 3220 † | | |
| | 31.39 | 56 | 157 | 246 | 375 | 491 | 751 | 1238 | 1569 | 1966 | 2321 | 2533 | 3256 † | | |
| | 34.74 | 50 | 170 | 211 | 363 | 536 | 749 | 1148 | 1687 | 2178 | 2383 | 2769 | 3232 † | | |
| | 38.44 | 45 | 168 | 238 | 387 | 582 | 821 | 1155 | 1856 | 2152 | 2460 | 3038 | 3508 † | | |
| | 42.54 | 40 | 152 | 253 | 387 | 585 | 744 | 1248 | 1860 | 2098 | 2400 | 3057 | 3304 † | | |
| | 47.08 | 37 | 159 | 251 | 390 | 495 | 731 | 1249 | 1694 | 2008 | 2352 | 2678 | 3313 † | | |
| | 52.11 | 34 | 172 | 241 | 354 | 495 | 613 | 1159 | 1438 | 2224 | 2207 | 2927 | 2943 | | |
| | 57.66 | 30 | 165 | 207 | 367 | 510 | 708 | 1027 | 1671 | 2171 | 2512 | 3038 | 3272 † | | |
| | 63.82 | 27 | 152 | 234 | 379 | 553 | 778 | 1118 | 1820 | 2173 | 2422 | 3057 | 3352 † | | |
| | 70.62 | 25 | 161 | 252 | 390 | 497 | 762 | 1217 | 1698 | 2120 | 2372 | 2674 | 3362 † | | |
| | 78.16 | 22 | 174 | | | | | | | | | | | | |
| 1430 | 13.95 | 100 | . . . | 166 | 281 | 388 | 511 | 725 | 1187 | . . . | 1360 | 1769 | . . . | 2305 | 2868 |
| | 15.44 | 90 | . . . | 185 | 307 | 419 | 565 | 780 | 1277 | . . . | 1500 | 1926 | 1950 | 2548 | 3120 |
| | 17.09 | 84 | . . . | 204 | 354 | 453 | 607 | 856 | 1472 | . . . | 1682 | 2175 | 2157 | 2920 | 3380 |
| | 18.91 | 75 | 157 | 199 | 330 | 490 | 672 | 921 | 1583 | 1849 | 1851 | 2377 | 2436 | 3171 | 3684 |
| | 20.93 | 68 | 166 | 249 | 381 | 555 | 738 | 1061 | 1659 | 2002 | 2076 | 2519 | 2657 | 3459 | 4038 |
| | 23.16 | 60 | 173 | 240 | 385 | 568 | 747 | 1155 | 1794 | 2092 | 2143 | 2753 | 2962 | 3604 | 4095 |
| | 25.63 | 56 | 168 | 262 | 386 | 580 | 780 | 1221 | 1846 | 2137 | 2364 | 3038 | 3281 † | 3794 | 4490 |
| | 28.36 | 50 | 151 | 250 | 387 | 583 | 770 | 1242 | 1851 | 2085 | 2384 | 2701 | 3272 † | 3859 | 4094 |
| | 31.39 | 45 | 158 | 249 | 380 | 493 | 754 | 1244 | 1615 | 2089 | 2337 | 2692 | 3284 † | 3789 | 4304 |
| | 34.74 | 40 | 171 | 214 | 385 | 546 | 756 | 1155 | 1737 | 2314 | 2397 | 2942 | 3301 † | 3901 | 4719 |
| | 38.44 | 37 | 168 | 241 | 387 | 586 | 842 | 1183 | 1866 | 2163 | 2614 | 3037 | 3591 † | 3909 | 5015 |
| | 42.54 | 34 | 152 | 263 | 388 | 587 | 777 | 1254 | 1869 | 2108 | 2412 | 3056 | 3329 † | 3922 | 5310 |
| | 47.08 | 30 | 160 | 252 | 390 | 496 | 760 | 1255 | 1700 | 2053 | 2364 | 2748 | 3339 † | 3547 | 4553 |
| | 52.11 | 27 | 173 | 241 | 356 | 497 | 622 | 1164 | 1464 | 2274 | 2257 | 2960 | 3019 | 3902 | 4994 |
| | 57.66 | 25 | 166 | 208 | 388 | 515 | 718 | 1043 | 1702 | 2178 | 2569 | 3039 | 3356 † | 3939 | 5449 |
| | 63.82 | 22 | 152 | 235 | 389 | 560 | 781 | 1135 | 1853 | 2179 | 2429 | 3057 | 3375 † | 3945 | 5389 |
| | 70.62 | 20 | 161 | 252 | 390 | 499 | 764 | 1236 | 1700 | 2127 | 2378 | 2684 | 3382 † | 3443 | 5402 |
| | 78.16 | 18 | 175 | | | | | | | | | | | | |
| 1170 | 13.95 | 84 | . . . | 168 | 295 | 397 | 524 | 747 | 1232 | . . . | 1415 | 1854 | . . . | 2427 | 3043 |
| | 15.44 | 75 | . . . | 187 | 323 | 429 | 580 | 804 | 1325 | . . . | 1561 | 2018 | 2044 | 2684 | 3311 |
| | 17.09 | 68 | . . . | 207 | 372 | 461 | 623 | 866 | 1527 | . . . | 1751 | 2280 | 2261 | 3076 | 3587 |
| | 18.91 | 60 | 157 | 199 | 351 | 499 | 689 | 932 | 1642 | 1924 | 1926 | 2492 | 2554 | 3340 | 3910 |
| | 20.93 | 56 | 166 | 249 | 382 | 582 | 784 | 1073 | 1698 | 2081 | 2161 | 2675 | 2785 | 3643 | 4286 |
| | 23.16 | 50 | 173 | 239 | 385 | 578 | 793 | 1168 | 1826 | 2130 | 2182 | 2923 | 3104 | 3828 | 4349 |
| | 25.63 | 45 | 168 | 263 | 387 | 583 | 828 | 1243 | 1857 | 2150 | 2406 | 3038 | 3452 † | 3877 | 4768 |
| | 28.36 | 40 | 152 | 251 | 388 | 585 | 773 | 1249 | 1860 | 2098 | 2400 | 2788 | 3300 † | 3891 | 4347 |
| | 31.39 | 37 | 159 | 250 | 382 | 495 | 757 | 1251 | 1654 | 2219 | 2350 | 2850 | 3311 † | 3879 | 4571 |
| | 34.74 | 34 | 172 | 216 | 386 | 555 | 759 | 1160 | 1779 | 2409 | 2411 | 2959 | 3327 † | 3901 | 5011 |
| | 38.44 | 30 | 168 | 244 | 387 | 586 | 850 | 1206 | 1872 | 2172 | 2700 | 3038 | 3619 † | 3936 | 5325 |
| | 42.54 | 27 | 152 | 263 | 387 | 587 | 780 | 1257 | 1874 | 2117 | 2423 | 3057 | 3352 † | 3945 | 5351 |
| | 47.08 | 25 | 161 | 252 | 392 | 497 | 760 | 1258 | 1699 | 2089 | 2373 | 2804 | 3360 † | 3625 | 4665 |
| | 52.11 | 22 | 174 | 241 | 359 | 498 | 629 | 1166 | 1488 | 2315 | 2297 | 2959 | 3081 | 3901 | 5168 |
| | 57.66 | 20 | 167 | 209 | 387 | 520 | 725 | 1058 | 1730 | 2185 | 2615 | 3037 | 3425 † | 3937 | 5450 |
| | 63.82 | 18 | 152 | 236 | 387 | 566 | 782 | 1151 | 1884 | 2186 | 2436 | 3056 | 3394 † | 3946 | 5424 |
| | 70.62 | 16.5 | 162 | 252 | 392 | 499 | 765 | 1253 | 1697 | 2129 | 2385 | 2688 | 3402 † | 3464 | 5435 |
| | 78.16 | 15.0 | 175 | | | | | | | | | | | | |

† For Size 555ABRJ (hollow low speed shaft with shrink disc) the hp rating and torque rating are limited by the shrink disc, see Page 77 for instructions.

Triple reduction ratios and ratings in the screened areas are offered for Types ABR and ABX only.

| High Speed Shaft rpm | AVAILABILITY OF TYPES AB / ABR/ ABX TRIPLE & QUADRUPLE REDUCTION TYPE | 385 | 405 | 425 | 445 | 465 | 485 | 505 | 525 | 535 | 545 | 555 | 565 | 585 |
|---|---|---|---|---|---|---|---|---|---|---|---|---|---|---|
| All | AB | X | X | X | X | X | X | X | X | . . . | X | . . . | X | X |
| | ABR | . . . | X | X | X | X | X | X | . . . | X | . . . | X | . . . | . . . |
| | ABX | . . . | X | X | X | X | X | X | . . . | X | . . . | X | . . . | . . . |

© Rexnord Industries,LLC, 1998, 2009.

# Type AB, ABR & ABX Right Angle Shaft Horsepower Ratings/Triple Reduction

| High Speed Shaft rpm | Nominal Ratios ±4% | Approx. Low Speed Shaft rpm | DRIVE SIZE 385 | 405 | 425 | 445 | 465 | 485 | 505 | 525 | 535 | 545 | 555 | 565 | 585 |
|---|---|---|---|---|---|---|---|---|---|---|---|---|---|---|---|
| 870 | 13.95 | 62 | . . . | 165 | 305 | 390 | 538 | 753 | 1212 | . . . | 1394 | 2005 | . . . | 2571 | 3218 |
| | 15.44 | 55 | . . . | 161 | 305 | 390 | 538 | 753 | 1212 | . . . | 1394 | 2005 | 2005 | 2571 | 3218 |
| | 17.09 | 50 | . . . | 161 | 300 | 379 | 538 | 716 | 1212 | . . . | 1394 | 2005 | 2005 | 2571 | 3218 |
| | 18.91 | 45 | 115 | 148 | 268 | 379 | 538 | 716 | 1212 | 1394 | 1394 | 2005 | 2005 | 2571 | 3218 |
| | 20.93 | 42 | 109 | 160 | 247 | 376 | 538 | 716 | 1128 | 1344 | 1394 | 1920 | 2005 | 2571 | 3218 |
| | 23.16 | 38 | 104 | 148 | 230 | 349 | 494 | 716 | 1105 | 1305 | 1305 | 1824 | 2005 † | 2417 | 2935 |
| | 25.63 | 34 | 93.9 | 145 | 212 | 327 | 447 | 658 | 973 | 1176 | 1305 | 1673 | 1986 † | 2092 | 2935 |
| | 28.36 | 31 | 72.0 | 127 | 194 | 278 | 390 | 610 | 895 | 1058 | 1168 | 1444 | 1651 † | 1917 | 2324 |
| | 31.39 | 28 | 71.8 | 108 | 165 | 219 | 326 | 561 | 742 | 1071 | 1058 | 1256 | 1521 † | 1723 | 2268 |
| | 34.74 | 25 | 71.8 | 90.2 | 153 | 227 | 304 | 476 | 742 | 970 | 979 | 1193 | 1348 † | 1512 | 2235 |
| | 38.44 | 22 | 62.6 | 90.2 | 141 | 219 | 310 | 432 | 657 | 774 | 963 | 1095 | 1318 † | 1399 | 2000 |
| | 42.54 | 21 | 48.0 | 88.9 | 129 | 186 | 250 | 406 | 604 | 697 | 769 | 1012 | 1095 † | 1281 | 1804 |
| | 47.08 | 18 | 48.2 | 72.5 | 120 | 147 | 226 | 373 | 498 | 627 | 696 | 838 | 1009 † | 1111 | 1459 |
| | 52.11 | 17 | 48.2 | 63.3 | 94.9 | 136 | 175 | 316 | 414 | 627 | 627 | 796 | 843 † | 1017 | 1459 |
| | 57.66 | 15 | 38.8 | 49.4 | 92.9 | 129 | 175 | 249 | 414 | 515 | 627 | 730 | 843 † | 941 | 1327 |
| | 63.82 | 14 | 32.2 | 49.4 | 84.9 | 129 | 165 | 249 | 409 | 491 | 512 | 675 | 738 † | 861 | 1211 |
| | 70.62 | 12.5 | 32.5 | 48.7 | 78.7 | 96.9 | 149 | 249 | 336 | 409 | 463 | 532 | 680 † | 684 | 1120 |
| | 78.16 | 11.0 | 32.5 | | | | | | | | | | | | |
| 720 | 13.95 | 50 | . . . | 137 | 255 | 327 | 451 | 623 | 1023 | . . . | 1178 | 1701 | . . . | 2186 | 2746 |
| | 15.44 | 45 | . . . | 133 | 255 | 327 | 451 | 623 | 1023 | . . . | 1178 | 1701 | 1701 | 2186 | 2746 |
| | 17.09 | 42 | . . . | 133 | 248 | 313 | 451 | 592 | 1023 | . . . | 1178 | 1701 | 1701 | 2186 | 2746 |
| | 18.91 | 38 | 95.5 | 122 | 221 | 313 | 451 | 592 | 1023 | 1174 | 1175 | 1701 | 1701 | 2186 | 2746 |
| | 20.93 | 34 | 89.9 | 133 | 205 | 312 | 451 | 592 | 943 | 1117 | 1175 | 1589 | 1701 | 2140 | 2746 |
| | 23.16 | 31 | 86.0 | 123 | 190 | 289 | 412 | 592 | 915 | 1080 | 1080 | 1510 | 1692 † | 2000 | 2571 |
| | 25.63 | 28 | 77.7 | 120 | 175 | 271 | 371 | 544 | 808 | 977 | 1080 | 1385 | 1655 † | 1738 | 2540 |
| | 28.36 | 25 | 59.6 | 105 | 160 | 230 | 324 | 506 | 743 | 879 | 970 | 1209 | 1375 † | 1591 | 1964 |
| | 31.39 | 22 | 59.6 | 89.8 | 136 | 182 | 270 | 465 | 622 | 887 | 878 | 1040 | 1267 † | 1426 | 1945 |
| | 34.74 | 21 | 59.6 | 75.1 | 126 | 190 | 252 | 394 | 614 | 805 | 812 | 988 | 1123 † | 1251 | 1849 |
| | 38.44 | 18 | 51.8 | 75.1 | 117 | 181 | 257 | 361 | 545 | 642 | 799 | 906 | 1097 † | 1158 | 1655 |
| | 42.54 | 17 | 39.7 | 73.6 | 107 | 154 | 207 | 337 | 501 | 578 | 638 | 838 | 911 † | 1060 | 1501 |
| | 47.08 | 15 | 40.0 | 60.0 | 98.9 | 122 | 187 | 309 | 412 | 524 | 578 | 693 | 839 † | 931 | 1224 |
| | 52.11 | 14 | 40.0 | 52.4 | 78.9 | 112 | 146 | 262 | 346 | 524 | 524 | 658 | 705 † | 841 | 1224 |
| | 57.66 | 12.5 | 32.2 | 41.0 | 76.9 | 107 | 146 | 208 | 346 | 427 | 524 | 604 | 705 † | 779 | 1098 |
| | 63.82 | 11.0 | 26.6 | 41.0 | 70.2 | 107 | 137 | 208 | 339 | 407 | 424 | 558 | 614 † | 713 | 1006 |
| | 70.62 | 10.0 | 26.9 | 40.3 | 65.1 | 80.2 | 123 | 206 | 278 | 339 | 384 | 441 | 565 † | 569 | 929 |
| | 78.16 | 9.1 | 26.9 | | | | | | | | | | | | |
| 580 | 13.95 | 42 | . . . | 112 | 207 | 266 | 368 | 502 | 839 | . . . | 968 | 1401 | . . . | 1805 | 2275 |
| | 15.44 | 38 | . . . | 107 | 207 | 266 | 368 | 502 | 839 | . . . | 968 | 1401 | 1401 | 1805 | 2275 |
| | 17.09 | 34 | . . . | 107 | 200 | 252 | 368 | 477 | 839 | . . . | 968 | 1401 | 1401 | 1805 | 2275 |
| | 18.91 | 31 | 76.9 | 98.6 | 178 | 252 | 368 | 477 | 839 | 946 | 946 | 1401 | 1401 | 1805 | 2275 |
| | 20.93 | 28 | 72.4 | 107 | 165 | 252 | 368 | 477 | 764 | 904 | 946 | 1280 | 1401 | 1724 | 2275 |
| | 23.16 | 25 | 69.3 | 98.9 | 153 | 233 | 334 | 477 | 737 | 870 | 870 | 1216 | 1373 † | 1611 | 2153 |
| | 25.63 | 22 | 62.6 | 96.7 | 141 | 219 | 300 | 438 | 653 | 789 | 870 | 1115 | 1342 † | 1400 | 2046 |
| | 28.36 | 21 | 48.0 | 85.1 | 129 | 186 | 261 | 409 | 600 | 710 | 784 | 974 | 1115 † | 1282 | 1613 |
| | 31.39 | 18 | 48.2 | 72.5 | 110 | 147 | 218 | 376 | 507 | 714 | 710 | 838 | 1027 † | 1149 | 1567 |
| | 34.74 | 17 | 48.2 | 60.8 | 102 | 154 | 204 | 318 | 495 | 650 | 656 | 796 | 910 † | 1008 | 1490 |
| | 38.44 | 15 | 41.7 | 60.8 | 94.1 | 146 | 207 | 294 | 440 | 519 | 645 | 730 | 889 † | 933 | 1333 |
| | 42.54 | 14 | 32.0 | 59.4 | 86.0 | 124 | 167 | 272 | 404 | 466 | 515 | 675 | 738 † | 854 | 1217 |
| | 47.08 | 12.5 | 32.3 | 48.4 | 79.7 | 98.1 | 151 | 250 | 332 | 426 | 466 | 558 | 680 † | 758 | 998 |
| | 52.11 | 11.0 | 32.3 | 42.3 | 63.9 | 90.6 | 118 | 212 | 281 | 426 | 426 | 530 | 574 † | 678 | 988 |
| | 57.66 | 10.0 | 26.0 | 33.1 | 61.9 | 86.7 | 118 | 168 | 281 | 345 | 426 | 487 | 574 † | 627 | 884 |
| | 63.82 | 9.1 | 21.5 | 33.1 | 56.6 | 86.7 | 110 | 168 | 273 | 329 | 342 | 450 | 497 † | 574 | 811 |
| | 70.62 | 8.3 | 21.7 | 32.5 | 52.5 | 64.7 | 99.5 | 166 | 224 | 273 | 310 | 356 | 457 † | 460 | 749 |
| | 78.16 | 7.5 | 21.7 | | | | | | | | | | | | |

† For Size 555ABRJ (hollow low speed shaft with shrink disc) the hp rating and torque rating are limited by the shrink disc, see Page 77 for instructions.

Triple reduction ratios and ratings in the screened areas are offered for Types ABR and ABX only.

| High Speed Shaft rpm | AVAILABILITY OF TYPES AB / ABR / ABX TRIPLE & QUADRUPLE REDUCTION TYPE | 385 | 405 | 425 | 445 | 465 | 485 | 505 | 525 | 535 | 545 | 555 | 565 | 585 |
|---|---|---|---|---|---|---|---|---|---|---|---|---|---|---|
| All | AB | X | X | X | X | X | X | X | X | . . . | X | . . . | X | X |
| | ABR | . . . | X | X | X | X | X | X | . . . | X | . . . | X | . . . | . . . |
| | ABX | . . . | X | X | X | X | X | X | . . . | X | . . . | X | . . . | . . . |


© Rexnord Industries, LLC, 1998, 2009.

# Type AB, ABR & ABX Right Angle Shaft Torque Ratings/Triple Reduction

(TORQUE IS IN POUND-INCHES AT LOW SPEED SHAFT. . . MULTIPLY VALUES LISTED BELOW BY 1000)

| High Speed Shaft rpm | Nominal Ratios ±4% | Approx. Low Speed Shaft rpm | DRIVE SIZE 385 | 405 | 425 | 445 | 465 | 485 | 505 | 525 | 535 | 545 | 555 | 565 | 585 |
|---|---|---|---|---|---|---|---|---|---|---|---|---|---|---|---|
| 870 | 13.95 | 62 | . . . | 172 | 303 | 407 | 538 | 772 | 1282 | . . . | 1479 | 1953 | . . . | 2570 | 3246 |
| | 15.44 | 55 | . . . | 186 | 331 | 440 | 596 | 831 | 1379 | . . . | 1631 | 2126 | 2153 | 2842 | 3531 |
| | 17.09 | 50 | . . . | 207 | 375 | 462 | 640 | 867 | 1589 | . . . | 1830 | 2402 | 2381 | 3256 | 3826 |
| | 18.91 | 45 | 157 | 199 | 358 | 499 | 709 | 933 | 1709 | 2010 | 2013 | 2625 | 2690 | 3536 | 4170 |
| | 20.93 | 42 | 167 | 251 | 381 | 585 | 818 | 1074 | 1733 | 2099 | 2258 | 2850 | 2933 | 3856 | 4571 |
| | 23.16 | 38 | 172 | 239 | 386 | 577 | 813 | 1169 | 1826 | 2130 | 2182 | 2959 | 3270 † | 3899 | 4754 |
| | 25.63 | 34 | 168 | 264 | 387 | 586 | 849 | 1244 | 1869 | 2166 | 2406 | 3038 | 3601 † | 3922 | 5211 |
| | 28.36 | 31 | 152 | 251 | 388 | 588 | 777 | 1255 | 1872 | 2111 | 2416 | 2889 | 3337 † | 3935 | 4621 |
| | 31.39 | 28 | 161 | 251 | 382 | 496 | 761 | 1256 | 1698 | 2413 | 2367 | 2850 | 3346 † | 3879 | 4996 |
| | 34.74 | 25 | 174 | 219 | 386 | 563 | 760 | 1166 | 1826 | 2421 | 2425 | 2958 | 3360 † | 3902 | 5397 |
| | 38.44 | 22 | 168 | 247 | 387 | 589 | 854 | 1233 | 1879 | 2180 | 2715 | 3039 | 3653 † | 3937 | 5450 |
| | 42.54 | 21 | 152 | 265 | 388 | 590 | 783 | 1262 | 1882 | 2126 | 2433 | 3057 | 3383 † | 3947 | 5405 |
| | 47.08 | 18 | 162 | 253 | 392 | 499 | 765 | 1262 | 1699 | 2133 | 2381 | 2852 | 3393 † | 3720 | 4795 |
| | 52.11 | 17 | 175 | 241 | 363 | 500 | 635 | 1169 | 1512 | 2363 | 2344 | 2961 | 3152 † | 3903 | 5311 |
| | 57.66 | 15 | 168 | 210 | 387 | 527 | 733 | 1070 | 1757 | 2190 | 2669 | 3039 | 3504 † | 3939 | 5452 |
| | 63.82 | 14 | 152 | 237 | 387 | 574 | 785 | 1164 | 1891 | 2190 | 2445 | 3058 | 3420 † | 3946 | 5470 |
| | 70.62 | 12.5 | 162 | 253 | 391 | 500 | 766 | 1267 | 1701 | 2137 | 2391 | 2697 | 3430 † | 3490 | 5479 |
| | 78.16 | 11.0 | 176 | | | | | | | | | | | | |
| 720 | 13.95 | 50 | . . . | 172 | 306 | 412 | 545 | 772 | 1308 | . . . | 1510 | 2002 | . . . | 2640 | 3347 |
| | 15.44 | 45 | . . . | 186 | 334 | 445 | 604 | 831 | 1406 | . . . | 1665 | 2179 | 2207 | 2919 | 3641 |
| | 17.09 | 42 | . . . | 206 | 375 | 461 | 648 | 866 | 1621 | . . . | 1868 | 2462 | 2441 | 3345 | 3945 |
| | 18.91 | 38 | 157 | 199 | 357 | 498 | 718 | 932 | 1743 | 2046 | 2050 | 2691 | 2757 | 3633 | 4300 |
| | 20.93 | 34 | 166 | 252 | 382 | 586 | 828 | 1073 | 1751 | 2108 | 2300 | 2850 | 3007 | 3879 | 4713 |
| | 23.16 | 31 | 172 | 240 | 385 | 577 | 820 | 1168 | 1827 | 2130 | 2182 | 2960 | 3334 † | 3899 | 5032 |
| | 25.63 | 28 | 168 | 264 | 386 | 587 | 852 | 1243 | 1875 | 2175 | 2406 | 3039 | 3626 † | 3938 | 5450 |
| | 28.36 | 25 | 152 | 251 | 387 | 588 | 780 | 1258 | 1878 | 2119 | 2425 | 2923 | 3358 † | 3946 | 4719 |
| | 31.39 | 22 | 161 | 252 | 380 | 498 | 762 | 1258 | 1720 | 2415 | 2373 | 2851 | 3368 † | 3879 | 5177 |
| | 34.74 | 21 | 174 | 220 | 384 | 569 | 762 | 1166 | 1826 | 2428 | 2430 | 2960 | 3382 † | 3901 | 5395 |
| | 38.44 | 18 | 168 | 248 | 388 | 588 | 856 | 1246 | 1884 | 2185 | 2722 | 3038 | 3674 † | 3938 | 5449 |
| | 42.54 | 17 | 152 | 265 | 388 | 590 | 783 | 1266 | 1886 | 2131 | 2439 | 3059 | 3401 † | 3947 | 5434 |
| | 47.08 | 15 | 162 | 253 | 391 | 501 | 765 | 1263 | 1698 | 2154 | 2389 | 2850 | 3409 † | 3767 | 4861 |
| | 52.11 | 14 | 176 | 241 | 365 | 498 | 640 | 1171 | 1527 | 2386 | 2368 | 2957 | 3185 † | 3900 | 5384 |
| | 57.66 | 12.5 | 169 | 210 | 387 | 528 | 739 | 1080 | 1775 | 2194 | 2695 | 3038 | 3541 † | 3940 | 5451 |
| | 63.82 | 11.0 | 151 | 237 | 387 | 575 | 787 | 1175 | 1894 | 2193 | 2447 | 3055 | 3438 † | 3948 | 5491 |
| | 70.62 | 10.0 | 162 | 253 | 391 | 500 | 765 | 1267 | 1700 | 2140 | 2396 | 2702 | 3443 † | 3508 | 5492 |
| | 78.16 | 9.1 | 176 | | | | | | | | | | | | |
| 580 | 13.95 | 42 | . . . | 175 | 308 | 416 | 552 | 772 | 1331 | . . . | 1540 | 2047 | . . . | 2706 | 3442 |
| | 15.44 | 38 | . . . | 186 | 337 | 450 | 611 | 831 | 1432 | . . . | 1699 | 2228 | 2256 | 2992 | 3745 |
| | 17.09 | 34 | . . . | 206 | 375 | 461 | 657 | 866 | 1650 | . . . | 1906 | 2517 | 2496 | 3429 | 4057 |
| | 18.91 | 31 | 157 | 199 | 357 | 498 | 727 | 932 | 1775 | 2047 | 2049 | 2751 | 2819 | 3724 | 4422 |
| | 20.93 | 28 | 166 | 252 | 381 | 588 | 839 | 1074 | 1761 | 2118 | 2298 | 2850 | 3075 | 3879 | 4847 |
| | 23.16 | 25 | 172 | 240 | 385 | 578 | 825 | 1168 | 1827 | 2130 | 2182 | 2959 | 3359 † | 3898 | 5231 |
| | 25.63 | 22 | 168 | 265 | 386 | 589 | 855 | 1242 | 1881 | 2180 | 2406 | 3037 | 3650 † | 3937 | 5449 |
| | 28.36 | 21 | 152 | 252 | 387 | 590 | 780 | 1262 | 1882 | 2125 | 2433 | 2923 | 3380 † | 3948 | 4811 |
| | 31.39 | 18 | 162 | 253 | 382 | 499 | 763 | 1263 | 1740 | 2413 | 2382 | 2852 | 3389 † | 3880 | 5177 |
| | 34.74 | 17 | 175 | 221 | 386 | 573 | 765 | 1168 | 1828 | 2434 | 2437 | 2961 | 3402 † | 3902 | 5397 |
| | 38.44 | 15 | 168 | 250 | 387 | 589 | 856 | 1259 | 1888 | 2193 | 2728 | 3039 | 3696 † | 3939 | 5448 |
| | 42.54 | 14 | 152 | 265 | 388 | 590 | 784 | 1268 | 1888 | 2132 | 2444 | 3058 | 3420 † | 3947 | 5469 |
| | 47.08 | 12.5 | 163 | 253 | 391 | 500 | 767 | 1269 | 1699 | 2174 | 2391 | 2849 | 3430 † | 3807 | 4920 |
| | 52.11 | 11.0 | 176 | 242 | 367 | 500 | 642 | 1177 | 1540 | 2408 | 2389 | 2957 | 3219 † | 3903 | 5395 |
| | 57.66 | 10.0 | 169 | 211 | 387 | 531 | 741 | 1083 | 1789 | 2201 | 2720 | 3041 | 3579 † | 3936 | 5447 |
| | 63.82 | 9.1 | 152 | 238 | 387 | 579 | 785 | 1179 | 1893 | 2201 | 2450 | 3058 | 3455 † | 3946 | 5495 |
| | 70.62 | 8.3 | 163 | 253 | 391 | 501 | 768 | 1267 | 1701 | 2140 | 2401 | 2708 | 3457 † | 3521 | 5496 |
| | 78.16 | 7.5 | 176 | | | | | | | | | | | | |

† For Size 555ABRJ (hollow low speed shaft with shrink disc) the hp rating and torque rating are limited by the shrink disc, see Page 77 for instructions.

Triple reduction ratios and ratings in the screened areas are offered for Types ABR and ABX only.

| High Speed Shaft rpm | AVAILABILITY OF TYPES AB / ABR / ABX TRIPLE & QUADRUPLE REDUCTION TYPE | 385 | 405 | 425 | 445 | 465 | 485 | 505 | 525 | 535 | 545 | 555 | 565 | 585 |
|---|---|---|---|---|---|---|---|---|---|---|---|---|---|---|
| All | AB | X | X | X | X | X | X | X | X | . . . | X | . . . | X | X |
| | ABR | . . . | X | X | X | X | X | X | . . . | X | . . . | X | . . . | . . . |
| | ABX | . . . | X | X | X | X | X | X | . . . | X | . . . | X | . . . | . . . |

© Rexnord Industries,LLC, 1998, 2009.

# Type AB, ABR & ABX Right Angle Shaft Horsepower Ratings/Quadruple Reduction

| High Speed Shaft rpm | Nominal Ratios ±5% | Approx. Low Speed Shaft rpm | DRIVE SIZE | | | | | | | | | | | | |
|---|---|---|---|---|---|---|---|---|---|---|---|---|---|---|---|
| | | | 385 | 405 | 425 | 445 | 465 | 485 | 505 | 525 | 535 | 545 | 555 | 565 | 585 |
| 1750 | **78.16** | **22.0** | . . . | 82.4 | 143 | 218 | 305 | 416 | 660 | 846 | 858 | 1147 | 1289 † | 1379 | 1848 |
| | **86.50** | **20.0** | 53.0 | 79.8 | 122 | 198 | 268 | 408 | 605 | 694 | 858 | 1045 | 1192 † | 1244 | 1690 |
| | **95.73** | **18.0** | 50.8 | 73.6 | 112 | 168 | 232 | 377 | 556 | 692 | 759 | 895 | 1047 † | 1152 | 1532 |
| | **105.9** | **16.5** | 42.6 | 64.8 | 104 | 153 | 227 | 326 | 485 | 552 | 687 | 821 | 968 † | 1031 | 1367 |
| | **117.2** | **15.0** | 40.7 | 56.6 | 95.4 | 146 | 205 | 301 | 446 | 527 | 655 | 759 | 804 † | 930 | 1235 |
| | **129.7** | **13.5** | 36.8 | 58.5 | 81.7 | 133 | 182 | 273 | 418 | 480 | 597 | 685 | 740 † | 814 | 1132 |
| | **143.6** | **12.0** | 35.2 | 49.5 | 75.8 | 122 | 162 | 252 | 384 | 478 | 523 | 601 | 710 † | 756 | 1023 |
| | **158.9** | **11.0** | 28.5 | 43.6 | 69.9 | 105 | 150 | 218 | 335 | 382 | 475 | 551 | 656 † | 675 | 936 |
| | **175.9** | **10.0** | 28.5 | 38.0 | 63.9 | 98.7 | 135 | 201 | 308 | 337 | 419 | 510 | 545 † | 624 | 845 |
| | **194.6** | **9.0** | 24.7 | 39.3 | 54.8 | 89.1 | 120 | 180 | 276 | 317 | 340 | 462 | 501 † | 554 | 773 |
| | **215.4** | **8.1** | 23.6 | 31.8 | 50.8 | 75.6 | 105 | 166 | 254 | 279 | 340 | 403 | 483 † | 500 | 677 |
| | **238.4** | **7.5** | 19.2 | 27.8 | 46.9 | 70.8 | 101 | 144 | 221 | 252 | 313 | 371 | 446 † | 447 | 620 |
| | **263.8** | **6.6** | 19.1 | 28.1 | 42.9 | 65.0 | 79.9 | 132 | 203 | 240 | 299 | 343 | 370 † | 414 | 560 |
| | **291.9** | **6.0** | 16.4 | 22.5 | 37.9 | 55.3 | 72.0 | 122 | 187 | 200 | 238 | 294 | 341 † | 382 | 513 |
| | **323.1** | **5.4** | 13.1 | 20.9 | 34.8 | 51.1 | 65.1 | 113 | 172 | 181 | 210 | 272 | 294 † | 309 | 473 |
| | **357.5** | **5.0** | . . . | 19.2 | 31.8 | 40.3 | 60.1 | 103 | 143 | 168 | 185 | 209 | 271 † | 283 | 433 |
| 1430 | **78.16** | **18.0** | . . . | 70.8 | 117 | 179 | 250 | 362 | 540 | 692 | 701 | 938 | 1060 † | 1127 | 1529 |
| | **86.50** | **16.5** | 43.3 | 65.2 | 100 | 162 | 223 | 334 | 495 | 568 | 701 | 856 | 980 † | 1017 | 1381 |
| | **95.73** | **15.0** | 41.5 | 60.2 | 91.8 | 137 | 201 | 308 | 455 | 566 | 620 | 731 | 860 † | 942 | 1259 |
| | **105.9** | **13.5** | 34.8 | 53.0 | 84.7 | 125 | 186 | 267 | 397 | 452 | 562 | 671 | 795 † | 843 | 1117 |
| | **117.2** | **12.0** | 33.3 | 46.3 | 77.9 | 120 | 168 | 246 | 365 | 431 | 536 | 620 | 660 † | 760 | 1009 |
| | **129.7** | **11.0** | 30.1 | 47.8 | 66.8 | 108 | 149 | 224 | 342 | 393 | 489 | 560 | 608 † | 665 | 925 |
| | **143.6** | **10.0** | 28.8 | 40.5 | 61.9 | 99.6 | 140 | 206 | 314 | 391 | 427 | 491 | 583 † | 617 | 836 |
| | **158.9** | **9.0** | 23.3 | 35.6 | 57.1 | 86.2 | 123 | 178 | 274 | 312 | 389 | 450 | 539 † | 551 | 765 |
| | **175.9** | **8.1** | 23.3 | 31.1 | 52.2 | 80.8 | 111 | 164 | 252 | 275 | 343 | 416 | 447 † | 510 | 690 |
| | **194.6** | **7.5** | 20.2 | 32.1 | 44.8 | 72.9 | 98.2 | 147 | 226 | 259 | 282 | 377 | 411 † | 453 | 632 |
| | **215.4** | **6.6** | 19.3 | 26.0 | 41.5 | 61.8 | 85.6 | 136 | 207 | 229 | 282 | 329 | 396 † | 409 | 553 |
| | **238.4** | **6.0** | 15.7 | 22.7 | 38.3 | 57.9 | 82.9 | 118 | 181 | 206 | 256 | 303 | 366 † | 365 | 506 |
| | **263.8** | **5.4** | 15.6 | 22.9 | 35.0 | 53.2 | 65.3 | 108 | 166 | 196 | 244 | 281 | 303 † | 338 | 457 |
| | **291.9** | **5.0** | 13.4 | 18.4 | 31.0 | 45.2 | 58.9 | 99.9 | 153 | 163 | 195 | 240 | 279 † | 312 | 419 |
| | **323.1** | **4.4** | 10.7 | 17.1 | 28.5 | 41.8 | 53.2 | 92.0 | 140 | 148 | 172 | 222 | 241 † | 254 | 387 |
| | **357.5** | **4.0** | . . . | 15.7 | 26.0 | 33.0 | 49.1 | 84.6 | 117 | 137 | 152 | 171 | 222 † | 232 | 354 |
| 1170 | **78.16** | **15.0** | . . . | 57.9 | 95.7 | 147 | 205 | 314 | 443 | 566 | 574 | 767 | 872 † | 922 | 1251 |
| | **86.50** | **13.5** | 35.4 | 53.4 | 81.9 | 133 | 183 | 274 | 406 | 466 | 574 | 702 | 806 † | 832 | 1130 |
| | **95.73** | **12.0** | 33.9 | 49.3 | 75.1 | 112 | 174 | 253 | 373 | 464 | 507 | 598 | 707 † | 770 | 1036 |
| | **105.9** | **11.0** | 28.5 | 43.4 | 69.3 | 102 | 152 | 219 | 325 | 370 | 461 | 549 | 654 † | 690 | 914 |
| | **117.2** | **10.0** | 27.2 | 37.9 | 63.8 | 98.3 | 138 | 201 | 299 | 353 | 439 | 508 | 543 † | 622 | 826 |
| | **129.7** | **9.0** | 24.6 | 39.2 | 54.6 | 88.8 | 122 | 183 | 280 | 322 | 400 | 458 | 499 † | 544 | 757 |
| | **143.6** | **8.1** | 23.5 | 33.1 | 50.7 | 81.6 | 115 | 169 | 258 | 321 | 350 | 402 | 479 † | 505 | 684 |
| | **158.9** | **7.5** | 19.1 | 29.2 | 46.7 | 70.5 | 100 | 146 | 225 | 256 | 318 | 368 | 442 † | 451 | 626 |
| | **175.9** | **6.6** | 19.1 | 25.4 | 42.7 | 66.2 | 90.9 | 135 | 206 | 225 | 281 | 341 | 367 † | 417 | 565 |
| | **194.6** | **6.0** | 16.5 | 26.3 | 36.6 | 59.7 | 80.4 | 121 | 185 | 212 | 233 | 309 | 338 † | 370 | 517 |
| | **215.4** | **5.4** | 15.8 | 21.3 | 34.0 | 50.6 | 70.1 | 111 | 170 | 187 | 233 | 269 | 325 † | 335 | 453 |
| | **238.4** | **5.0** | 12.9 | 18.6 | 31.4 | 47.4 | 67.9 | 96.2 | 148 | 169 | 210 | 248 | 300 † | 299 | 414 |
| | **263.8** | **4.4** | 12.8 | 18.8 | 28.7 | 43.5 | 53.5 | 88.7 | 136 | 161 | 200 | 230 | 249 † | 276 | 374 |
| | **291.9** | **4.0** | 10.9 | 15.1 | 25.4 | 37.0 | 48.2 | 81.8 | 125 | 134 | 160 | 197 | 229 † | 256 | 343 |
| | **323.1** | **3.6** | 8.76 | 14.0 | 23.3 | 34.2 | 43.6 | 75.3 | 115 | 121 | 141 | 182 | 198 † | 208 | 317 |
| | **357.5** | **3.2** | . . . | 12.9 | 21.3 | 27.0 | 40.2 | 69.2 | 95.8 | 112 | 124 | 140 | 182 † | 190 | 289 |

† For Size 555ABRJ (hollow low speed shaft with shrink disc) the hp rating and torque rating are limited by the shrink disc, see Page 77 for instructions.

| High Speed Shaft rpm | AVAILABILITY OF TYPES AB / ABR / ABX TRIPLE & QUADRUPLE REDUCTION | | | | | | | | | | | | | |
|---|---|---|---|---|---|---|---|---|---|---|---|---|---|---|
| | TYPE | 385 | 405 | 425 | 445 | 465 | 485 | 505 | 525 | 535 | 545 | 555 | 565 | 585 |
| All | AB | X | X | X | X | X | X | X | X | . . . | X | . . . | X | X |
| | ABR | . . . | X | X | X | X | X | X | . . . | X | . . . | X | . . . | . . . |
| | ABX | . . . | X | X | X | X | X | X | . . . | X | . . . | X | . . . | . . . |


© Rexnord Industries, LLC, 1998, 2009.

# Type AB, ABR & ABX Right Angle Shaft Torque Ratings/Quadruple Reduction

(TORQUE IS IN POUND-INCHES AT LOW SPEED SHAFT. . . MULTIPLY VALUES LISTED BELOW BY 1000)

| High Speed Shaft rpm | Nominal Ratios ±5% | Approx. Low Speed Shaft rpm | DRIVE SIZE 385 | 405 | 425 | 445 | 465 | 485 | 505 | 525 | 535 | 545 | 555 | 565 | 585 |
|---|---|---|---|---|---|---|---|---|---|---|---|---|---|---|---|
| 1750 | 78.16 | 22.0 | . . . | 241 | 381 | 597 | 829 | 1113 | 1881 | 2360 | 2452 | 3131 | 3654 † | 3894 | 5383 |
| | 86.50 | 20.0 | 163 | 252 | 380 | 588 | 840 | 1257 | 1883 | 2185 | 2704 | 3192 | 3664 † | 3860 | 5449 |
| | 95.73 | 18.0 | 169 | 265 | 384 | 550 | 758 | 1264 | 1884 | 2432 | 2733 | 3051 | 3678 † | 3899 | 5431 |
| | 105.9 | 16.5 | 166 | 253 | 388 | 592 | 855 | 1261 | 1887 | 2190 | 2728 | 3132 | 3688 † | 3900 | 5396 |
| | 117.2 | 15.0 | 172 | 241 | 381 | 600 | 837 | 1267 | 1890 | 2192 | 2728 | 3151 | 3414 † | 3878 | 5396 |
| | 129.7 | 13.5 | 168 | 265 | 387 | 593 | 857 | 1261 | 1887 | 2192 | 2729 | 3117 | 3420 † | 3863 | 5461 |
| | 143.6 | 12.0 | 174 | 265 | 391 | 592 | 804 | 1267 | 1888 | 2437 | 2732 | 3051 | 3715 † | 3941 | 5463 |
| | 158.9 | 11.0 | 163 | 253 | 387 | 590 | 859 | 1264 | 1891 | 2198 | 2736 | 3131 | 3722 † | 3905 | 5495 |
| | 175.9 | 10.0 | 176 | 241 | 387 | 605 | 837 | 1269 | 1893 | 2200 | 2738 | 3154 | 3447 † | 3936 | 5461 |
| | 194.6 | 9.0 | 168 | 266 | 381 | 592 | 859 | 1263 | 1893 | 2199 | 2361 | 3119 | 3449 † | 3939 | 5493 |
| | 215.4 | 8.1 | 174 | 253 | 385 | 592 | 788 | 1268 | 1897 | 2196 | 2679 | 3133 | 3750 † | 3935 | 5458 |
| | 238.4 | 7.5 | 163 | 242 | 387 | 593 | 856 | 1269 | 1895 | 2203 | 2739 | 3128 | 3756 † | 3904 | 5495 |
| | 263.8 | 6.6 | 176 | 254 | 388 | 592 | 768 | 1266 | 1895 | 2200 | 2744 | 3148 | 3473 † | 3943 | 5464 |
| | 291.9 | 6.0 | 177 | 242 | 384 | 593 | 786 | 1266 | 1899 | 2148 | 2451 | 3129 | 3484 † | 3935 | 5496 |
| | 323.1 | 5.4 | 153 | 242 | 390 | 593 | 769 | 1276 | 1902 | 2140 | 2454 | 3151 | 3484 † | 3544 | 5488 |
| | 357.5 | 5.0 | . . . | 241 | 391 | 501 | 769 | 1266 | 1833 | 2148 | 2453 | 2710 | 3495 † | 3554 | 5495 |
| 1430 | 78.16 | 18.0 | . . . | 253 | 382 | 600 | 831 | 1185 | 1884 | 2362 | 2451 | 3133 | 3677 † | 3895 | 5450 |
| | 86.50 | 16.5 | 163 | 252 | 381 | 589 | 855 | 1259 | 1885 | 2188 | 2703 | 3200 | 3686 † | 3862 | 5449 |
| | 95.73 | 15.0 | 169 | 265 | 385 | 549 | 803 | 1264 | 1887 | 2435 | 2732 | 3049 | 3697 † | 3901 | 5462 |
| | 105.9 | 13.5 | 166 | 253 | 387 | 591 | 858 | 1264 | 1890 | 2194 | 2731 | 3132 | 3706 † | 3903 | 5395 |
| | 117.2 | 12.0 | 172 | 242 | 381 | 604 | 839 | 1267 | 1892 | 2194 | 2732 | 3150 | 3430 † | 3879 | 5395 |
| | 129.7 | 11.0 | 168 | 265 | 387 | 589 | 859 | 1267 | 1890 | 2196 | 2736 | 3118 | 3439 † | 3862 | 5461 |
| | 143.6 | 10.0 | 174 | 266 | 390 | 592 | 850 | 1268 | 1889 | 2440 | 2729 | 3051 | 3733 † | 3936 | 5463 |
| | 158.9 | 9.0 | 163 | 253 | 387 | 592 | 862 | 1264 | 1893 | 2197 | 2742 | 3129 | 3743 † | 3901 | 5497 |
| | 175.9 | 8.1 | 176 | 242 | 387 | 606 | 842 | 1267 | 1895 | 2197 | 2743 | 3149 | 3460 † | 3937 | 5457 |
| | 194.6 | 7.5 | 168 | 265 | 382 | 593 | 860 | 1263 | 1897 | 2199 | 2397 | 3115 | 3463 † | 3941 | 5496 |
| | 215.4 | 6.6 | 174 | 253 | 385 | 592 | 786 | 1271 | 1892 | 2206 | 2719 | 3131 | 3763 † | 3939 | 5456 |
| | 238.4 | 6.0 | 163 | 242 | 386 | 593 | 860 | 1272 | 1899 | 2204 | 2741 | 3127 | 3772 † | 3901 | 5489 |
| | 263.8 | 5.4 | 176 | 253 | 387 | 593 | 768 | 1268 | 1897 | 2199 | 2740 | 3156 | 3481 † | 3939 | 5456 |
| | 291.9 | 5.0 | 177 | 242 | 384 | 593 | 787 | 1268 | 1902 | 2143 | 2457 | 3126 | 3488 † | 3933 | 5493 |
| | 323.1 | 4.4 | 153 | 242 | 391 | 594 | 769 | 1271 | 1895 | 2141 | 2460 | 3147 | 3495 † | 3566 | 5495 |
| | 357.5 | 4.0 | . . . | 242 | 391 | 502 | 768 | 1273 | 1836 | 2144 | 2466 | 2713 | 3504 † | 3566 | 5498 |
| 1170 | 78.16 | 15.0 | . . . | 253 | 381 | 602 | 833 | 1256 | 1889 | 2362 | 2453 | 3131 | 3697 † | 3894 | 5450 |
| | 86.50 | 13.5 | 163 | 253 | 381 | 591 | 858 | 1262 | 1890 | 2194 | 2705 | 3207 | 3706 † | 3862 | 5449 |
| | 95.73 | 12.0 | 169 | 265 | 385 | 548 | 850 | 1269 | 1891 | 2439 | 2730 | 3049 | 3715 † | 3898 | 5493 |
| | 105.9 | 11.0 | 167 | 253 | 387 | 590 | 857 | 1267 | 1891 | 2195 | 2738 | 3132 | 3727 † | 3904 | 5396 |
| | 117.2 | 10.0 | 172 | 242 | 381 | 604 | 843 | 1265 | 1895 | 2197 | 2735 | 3155 | 3449 † | 3880 | 5398 |
| | 129.7 | 9.0 | 168 | 266 | 387 | 592 | 859 | 1265 | 1891 | 2200 | 2735 | 3117 | 3450 † | 3861 | 5462 |
| | 143.6 | 8.1 | 174 | 265 | 391 | 592 | 853 | 1271 | 1897 | 2448 | 2734 | 3053 | 3749 † | 3937 | 5463 |
| | 158.9 | 7.5 | 163 | 254 | 386 | 592 | 856 | 1267 | 1899 | 2203 | 2740 | 3128 | 3751 † | 3902 | 5497 |
| | 175.9 | 6.6 | 176 | 241 | 387 | 607 | 843 | 1275 | 1894 | 2197 | 2747 | 3154 | 3472 † | 3935 | 5461 |
| | 194.6 | 6.0 | 168 | 266 | 381 | 593 | 860 | 1270 | 1898 | 2200 | 2420 | 3121 | 3481 † | 3934 | 5495 |
| | 215.4 | 5.4 | 174 | 254 | 385 | 593 | 787 | 1268 | 1899 | 2201 | 2746 | 3128 | 3775 † | 3943 | 5462 |
| | 238.4 | 5.0 | 164 | 242 | 387 | 593 | 861 | 1268 | 1898 | 2210 | 2748 | 3128 | 3778 † | 3906 | 5489 |
| | 263.8 | 4.4 | 176 | 254 | 388 | 593 | 769 | 1272 | 1899 | 2208 | 2745 | 3157 | 3496 † | 3932 | 5458 |
| | 291.9 | 4.0 | 175 | 243 | 385 | 593 | 787 | 1269 | 1899 | 2153 | 2464 | 3136 | 3499 † | 3945 | 5496 |
| | 323.1 | 3.6 | 153 | 242 | 391 | 594 | 770 | 1272 | 1902 | 2139 | 2465 | 3154 | 3509 † | 3569 | 5502 |
| | 357.5 | 3.2 | . . . | 243 | 391 | 502 | 769 | 1272 | 1837 | 2142 | 2459 | 2715 | 3511 † | 3569 | 5486 |

† For Size 555ABRJ (hollow low speed shaft with shrink disc) the hp rating and torque rating are limited by the shrink disc, see Page 77 for instructions.

| High Speed Shaft rpm | AVAILABILITY OF TYPES AB / ABR / ABX TRIPLE & QUADRUPLE REDUCTION TYPE | 385 | 405 | 425 | 445 | 465 | 485 | 505 | 525 | 535 | 545 | 555 | 565 | 585 |
|---|---|---|---|---|---|---|---|---|---|---|---|---|---|---|
| All | AB | X | X | X | X | X | X | X | X | . . . | X | . . . | X | X |
| | ABR | . . . | X | X | X | X | X | X | . . . | X | . . . | X | . . . | . . . |
| | ABX | . . . | X | X | X | X | X | X | . . . | X | . . . | X | . . . | . . . |

© Rexnord Industries,LLC, 1998, 2009.

# Type AB, ABR & ABX Right Angle Shaft Horsepower Ratings/Quadruple Reduction

| High Speed Shaft rpm | Nominal Ratios ±5% | Approx. Low Speed Shaft rpm | DRIVE SIZE | | | | | | | | | | | | |
|---|---|---|---|---|---|---|---|---|---|---|---|---|---|---|---|
| | | | 385 | 405 | 425 | 445 | 465 | 485 | 505 | 525 | 535 | 545 | 555 | 565 | 585 |
| 870 | **78.16** | **11.0** | . . . | 43.1 | 71.1 | 110 | 153 | 236 | 330 | 421 | 427 | 570 | 653 † | 686 | 930 |
| | **86.50** | **10.0** | 26.3 | 39.8 | 60.9 | 99.0 | 136 | 204 | 302 | 347 | 427 | 523 | 603 † | 619 | 840 |
| | **95.73** | **9.1** | 25.2 | 36.7 | 55.8 | 83.4 | 130 | 188 | 278 | 346 | 377 | 445 | 529 † | 573 | 770 |
| | **105.9** | **8.3** | 21.2 | 32.3 | 51.5 | 76.2 | 113 | 163 | 242 | 276 | 343 | 408 | 489 † | 513 | 680 |
| | **117.2** | **7.5** | 20.3 | 28.2 | 47.4 | 73.3 | 103 | 150 | 222 | 263 | 327 | 377 | 406 † | 462 | 614 |
| | **129.7** | **6.8** | 18.3 | 29.1 | 40.6 | 66.1 | 90.8 | 136 | 209 | 240 | 298 | 341 | 374 † | 405 | 563 |
| | **143.6** | **6.1** | 17.5 | 24.6 | 37.7 | 60.7 | 85.5 | 126 | 192 | 239 | 260 | 299 | 358 † | 376 | 508 |
| | **158.9** | **5.5** | 14.2 | 21.7 | 34.8 | 52.5 | 74.7 | 109 | 167 | 190 | 237 | 274 | 331 † | 335 | 465 |
| | **175.9** | **5.0** | 14.2 | 18.9 | 31.8 | 49.3 | 67.7 | 100 | 154 | 168 | 209 | 253 | 274 † | 310 | 420 |
| | **194.6** | **4.5** | 12.3 | 19.6 | 27.2 | 44.4 | 59.8 | 89.9 | 138 | 158 | 175 | 230 | 252 † | 275 | 384 |
| | **215.4** | **4.1** | 11.7 | 15.8 | 25.3 | 37.7 | 52.1 | 82.8 | 126 | 139 | 173 | 200 | 243 † | 249 | 337 |
| | **238.4** | **3.8** | 9.57 | 13.8 | 23.3 | 35.2 | 50.5 | 71.6 | 110 | 125 | 156 | 185 | 224 † | 222 | 308 |
| | **263.8** | **3.3** | 9.51 | 14.0 | 21.3 | 32.4 | 39.8 | 66.0 | 101 | 120 | 149 | 171 | 186 † | 206 | 278 |
| | **291.9** | **3.0** | 8.14 | 11.2 | 18.9 | 27.5 | 35.9 | 60.8 | 93.0 | 99.4 | 119 | 146 | 171 † | 190 | 255 |
| | **323.1** | **2.7** | 6.51 | 10.4 | 17.3 | 25.4 | 32.4 | 56.0 | 85.4 | 90.3 | 105 | 135 | 148 † | 155 | 235 |
| | **357.5** | **2.5** | . . . | 9.57 | 15.8 | 20.1 | 29.9 | 51.5 | 71.4 | 83.5 | 92.3 | 104 | 136 † | 142 | 215 |
| 720 | **78.16** | **9.1** | . . . | 35.6 | 58.9 | 90.8 | 127 | 196 | 273 | 348 | 353 | 472 | 543 † | 567 | 770 |
| | **86.50** | **8.3** | 21.8 | 32.9 | 50.4 | 82.0 | 113 | 169 | 250 | 287 | 353 | 433 | 501 † | 512 | 695 |
| | **95.73** | **7.5** | 20.9 | 30.4 | 46.2 | 69.0 | 107 | 156 | 230 | 286 | 312 | 368 | 440 † | 474 | 638 |
| | **105.9** | **6.8** | 17.5 | 26.7 | 42.7 | 63.1 | 93.9 | 135 | 201 | 228 | 284 | 338 | 406 † | 424 | 562 |
| | **117.2** | **6.1** | 16.8 | 23.3 | 39.2 | 60.7 | 85.0 | 124 | 184 | 218 | 271 | 312 | 337 † | 383 | 508 |
| | **129.7** | **5.5** | 15.1 | 24.1 | 33.6 | 54.7 | 75.2 | 113 | 173 | 198 | 247 | 282 | 310 † | 335 | 466 |
| | **143.6** | **5.0** | 14.5 | 20.4 | 31.2 | 50.3 | 70.8 | 104 | 159 | 198 | 215 | 247 | 297 † | 311 | 421 |
| | **158.9** | **4.5** | 11.8 | 18.0 | 28.8 | 43.5 | 61.9 | 90.0 | 138 | 158 | 196 | 227 | 275 † | 278 | 385 |
| | **175.9** | **4.1** | 11.7 | 15.7 | 26.3 | 40.8 | 56.1 | 82.9 | 127 | 139 | 173 | 210 | 228 † | 257 | 348 |
| | **194.6** | **3.8** | 10.2 | 16.2 | 22.5 | 36.7 | 49.5 | 74.4 | 114 | 131 | 146 | 190 | 210 † | 228 | 318 |
| | **215.4** | **3.3** | 9.72 | 13.1 | 20.9 | 31.2 | 43.2 | 68.5 | 105 | 115 | 144 | 166 | 201 † | 206 | 279 |
| | **238.4** | **3.0** | 7.92 | 11.4 | 19.3 | 29.2 | 41.8 | 59.3 | 91.2 | 104 | 129 | 153 | 186 † | 184 | 255 |
| | **263.8** | **2.7** | 7.87 | 11.6 | 17.6 | 26.8 | 32.9 | 54.6 | 83.7 | 99.0 | 123 | 141 | 154 † | 170 | 230 |
| | **291.9** | **2.5** | 6.73 | 9.27 | 15.6 | 22.8 | 29.7 | 50.4 | 77.0 | 82.3 | 98.3 | 121 | 142 † | 157 | 211 |
| | **323.1** | **2.2** | 5.39 | 8.62 | 14.3 | 21.1 | 26.8 | 46.4 | 70.7 | 74.8 | 86.7 | 112 | 123 † | 129 | 195 |
| | **357.5** | **2.0** | . . . | 7.92 | 13.1 | 16.6 | 24.8 | 42.6 | 59.1 | 69.1 | 76.4 | 86.2 | 113 † | 118 | 178 |
| 580 | **78.16** | **7.5** | . . . | 28.7 | 47.4 | 73.3 | 103 | 158 | 220 | 281 | 284 | 380 | 439 † | 457 | 620 |
| | **86.5** | **6.8** | 17.6 | 26.5 | 40.6 | 66.1 | 90.9 | 136 | 202 | 232 | 284 | 348 | 406 † | 412 | 560 |
| | **95.73** | **6.1** | 16.8 | 24.5 | 37.2 | 55.6 | 86.6 | 126 | 185 | 231 | 251 | 297 | 356 † | 382 | 514 |
| | **105.9** | **5.5** | 14.1 | 21.6 | 34.4 | 50.8 | 75.7 | 109 | 162 | 184 | 229 | 272 | 328 † | 342 | 453 |
| | **117.2** | **5.0** | 13.5 | 18.8 | 31.6 | 49.0 | 68.6 | 100 | 148 | 176 | 219 | 252 | 273 † | 308 | 409 |
| | **129.7** | **4.5** | 12.2 | 19.4 | 27.1 | 44.1 | 60.6 | 91.0 | 139 | 160 | 199 | 227 | 251 † | 270 | 375 |
| | **143.6** | **4.1** | 11.7 | 16.4 | 25.1 | 40.5 | 57.1 | 83.8 | 128 | 159 | 173 | 199 | 240 † | 250 | 339 |
| | **158.9** | **3.8** | 9.50 | 14.5 | 23.2 | 35.0 | 49.9 | 72.5 | 112 | 127 | 158 | 183 | 222 † | 224 | 310 |
| | **175.9** | **3.3** | 9.45 | 12.6 | 21.2 | 32.9 | 45.2 | 66.8 | 102 | 112 | 139 | 169 | 184 † | 207 | 280 |
| | **194.6** | **3.0** | 8.19 | 13.0 | 18.2 | 29.6 | 39.9 | 59.9 | 91.8 | 105 | 118 | 153 | 169 † | 184 | 256 |
| | **215.4** | **2.7** | 7.83 | 10.6 | 16.8 | 25.1 | 34.8 | 55.2 | 84.3 | 92.9 | 116 | 133 | 163 † | 166 | 224 |
| | **238.4** | **2.5** | 6.38 | 9.21 | 15.5 | 23.5 | 33.7 | 47.8 | 73.5 | 83.7 | 104 | 123 | 150 † | 148 | 205 |
| | **263.8** | **2.2** | 6.34 | 9.31 | 14.2 | 21.6 | 26.5 | 44.0 | 67.5 | 79.8 | 99.3 | 114 | 125 † | 137 | 185 |
| | **291.9** | **2.0** | 5.43 | 7.47 | 12.6 | 18.4 | 23.9 | 40.6 | 62.0 | 66.3 | 79.3 | 97.5 | 115 † | 127 | 170 |
| | **323.1** | **1.8** | 4.34 | 6.94 | 11.5 | 17.0 | 21.6 | 37.4 | 57.0 | 60.3 | 69.8 | 90.2 | 98.9 † | 104 | 157 |
| | **357.5** | **1.6** | . . . | 6.38 | 10.5 | 13.4 | 20.0 | 34.3 | 47.7 | 55.7 | 61.6 | 69.4 | 91.0 † | 94.9 | 143 |

† For Size 555ABRJ (hollow low speed shaft with shrink disc) the hp rating and torque rating are limited by the shrink disc, see Page 77 for instructions.

| High Speed Shaft rpm | AVAILABILITY OF TYPES AB / ABR / ABX TRIPLE & QUADRUPLE REDUCTION | | | | | | | | | | | | | | |
|---|---|---|---|---|---|---|---|---|---|---|---|---|---|---|---|
| | TYPE | 385 | 405 | 425 | 445 | 465 | 485 | 505 | 525 | 535 | 545 | 555 | 565 | 585 |
| All | AB | X | X | X | X | X | X | X | X | . . . | X | . . . | X | X |
| | ABR | . . . | X | X | X | X | X | X | . . . | X | . . . | X | . . . | . . . |
| | ABX | . . . | X | X | X | X | X | X | . . . | X | . . . | X | . . . | . . . |


© Rexnord Industries, LLC, 1998, 2009.

# Type AB, ABR & ABX Right Angle Shaft Torque Ratings/Quadruple Reduction

(TORQUE IS IN POUND-INCHES AT LOW SPEED SHAFT. . . MULTIPLY VALUES LISTED BELOW BY 1000)

| High Speed Shaft rpm | Nominal Ratios ±5% | Approx. Low Speed Shaft rpm | DRIVE SIZE 385 | 405 | 425 | 445 | 465 | 485 | 505 | 525 | 535 | 545 | 555 | 565 | 585 |
|---|---|---|---|---|---|---|---|---|---|---|---|---|---|---|---|
| 870 | 78.16 | 11.0 | . . . | 253 | 381 | 606 | 836 | 1270 | 1892 | 2362 | 2454 | 3129 | 3723 † | 3897 | 5449 |
| | 86.50 | 10.0 | 163 | 253 | 381 | 592 | 857 | 1264 | 1891 | 2197 | 2707 | 3213 | 3728 † | 3864 | 5448 |
| | 95.73 | 9.1 | 169 | 266 | 385 | 549 | 854 | 1268 | 1895 | 2446 | 2730 | 3051 | 3738 † | 3901 | 5491 |
| | 105.9 | 8.3 | 167 | 253 | 386 | 593 | 856 | 1268 | 1894 | 2202 | 2739 | 3131 | 3747 † | 3904 | 5399 |
| | 117.2 | 7.5 | 173 | 242 | 381 | 606 | 846 | 1270 | 1892 | 2201 | 2739 | 3149 | 3468 † | 3875 | 5396 |
| | 129.7 | 6.8 | 168 | 265 | 387 | 593 | 860 | 1264 | 1898 | 2205 | 2740 | 3121 | 3477 † | 3866 | 5463 |
| | 143.6 | 6.1 | 174 | 265 | 391 | 593 | 853 | 1275 | 1899 | 2451 | 2732 | 3054 | 3768 † | 3942 | 5457 |
| | 158.9 | 5.5 | 163 | 254 | 387 | 593 | 860 | 1272 | 1896 | 2199 | 2746 | 3132 | 3778 † | 3898 | 5492 |
| | 175.9 | 5.0 | 176 | 242 | 388 | 607 | 844 | 1270 | 1904 | 2206 | 2747 | 3147 | 3486 † | 3934 | 5460 |
| | 194.6 | 4.5 | 168 | 266 | 381 | 593 | 861 | 1269 | 1904 | 2205 | 2445 | 3124 | 3490 † | 3933 | 5488 |
| | 215.4 | 4.1 | 173 | 253 | 386 | 594 | 786 | 1272 | 1893 | 2201 | 2742 | 3128 | 3795 † | 3942 | 5465 |
| | 238.4 | 3.8 | 164 | 242 | 386 | 593 | 861 | 1269 | 1897 | 2198 | 2746 | 3138 | 3794 † | 3900 | 5491 |
| | 263.8 | 3.3 | 176 | 254 | 387 | 594 | 770 | 1273 | 1897 | 2213 | 2751 | 3157 | 3512 † | 3946 | 5456 |
| | 291.9 | 3.0 | 176 | 242 | 385 | 593 | 788 | 1269 | 1900 | 2148 | 2465 | 3126 | 3514 † | 3937 | 5495 |
| | 323.1 | 2.7 | 153 | 242 | 390 | 593 | 769 | 1272 | 1900 | 2147 | 2468 | 3146 | 3527 † | 3576 | 5485 |
| | 357.5 | 2.5 | . . . | 242 | 391 | 502 | 769 | 1273 | 1841 | 2148 | 2462 | 2712 | 3528 † | 3587 | 5489 |
| 720 | 78.16 | 9.1 | . . . | 253 | 382 | 605 | 839 | 1274 | 1891 | 2360 | 2452 | 3131 | 3741 † | 3892 | 5451 |
| | 86.50 | 8.3 | 163 | 253 | 381 | 592 | 861 | 1265 | 1891 | 2196 | 2704 | 3215 | 3743 † | 3862 | 5446 |
| | 95.73 | 7.5 | 169 | 266 | 385 | 549 | 849 | 1271 | 1895 | 2443 | 2730 | 3049 | 3757 † | 3899 | 5497 |
| | 105.9 | 6.8 | 166 | 253 | 387 | 593 | 860 | 1269 | 1901 | 2198 | 2741 | 3134 | 3759 † | 3898 | 5392 |
| | 117.2 | 6.1 | 173 | 241 | 381 | 606 | 843 | 1269 | 1895 | 2204 | 2743 | 3149 | 3478 † | 3882 | 5395 |
| | 129.7 | 5.5 | 168 | 266 | 387 | 593 | 861 | 1269 | 1899 | 2198 | 2745 | 3119 | 3483 † | 3864 | 5464 |
| | 143.6 | 5.0 | 174 | 266 | 391 | 593 | 854 | 1271 | 1900 | 2454 | 2729 | 3048 | 3777 † | 3940 | 5464 |
| | 158.9 | 4.5 | 164 | 254 | 387 | 594 | 861 | 1269 | 1893 | 2210 | 2744 | 3135 | 3793 † | 3909 | 5494 |
| | 175.9 | 4.1 | 176 | 242 | 388 | 607 | 845 | 1272 | 1897 | 2206 | 2748 | 3157 | 3505 † | 3941 | 5466 |
| | 194.6 | 3.8 | 169 | 266 | 381 | 593 | 861 | 1269 | 1900 | 2209 | 2464 | 3118 | 3514 † | 3940 | 5492 |
| | 215.4 | 3.3 | 174 | 254 | 385 | 594 | 788 | 1272 | 1906 | 2200 | 2758 | 3137 | 3794 † | 3940 | 5467 |
| | 238.4 | 3.0 | 164 | 241 | 387 | 594 | 861 | 1270 | 1900 | 2210 | 2744 | 3136 | 3807 † | 3906 | 5494 |
| | 263.8 | 2.7 | 176 | 254 | 387 | 594 | 769 | 1273 | 1899 | 2206 | 2744 | 3145 | 3513 † | 3935 | 5454 |
| | 291.9 | 2.5 | 176 | 242 | 384 | 594 | 788 | 1271 | 1901 | 2149 | 2460 | 3130 | 3526 † | 3931 | 5494 |
| | 323.1 | 2.2 | 153 | 242 | 390 | 595 | 769 | 1274 | 1901 | 2149 | 2463 | 3154 | 3542 † | 3597 | 5499 |
| | 357.5 | 2.0 | . . . | 242 | 391 | 501 | 771 | 1273 | 1842 | 2148 | 2462 | 2716 | 3542 † | 3602 | 5491 |
| 580 | 78.16 | 7.5 | . . . | 253 | 381 | 606 | 844 | 1275 | 1892 | 2365 | 2449 | 3129 | 3755 † | 3894 | 5449 |
| | 86.50 | 6.8 | 163 | 253 | 381 | 593 | 860 | 1264 | 1897 | 2204 | 2700 | 3207 | 3765 † | 3858 | 5448 |
| | 95.73 | 6.1 | 169 | 266 | 385 | 549 | 853 | 1275 | 1892 | 2450 | 2727 | 3054 | 3773 † | 3901 | 5498 |
| | 105.9 | 5.5 | 166 | 254 | 387 | 593 | 861 | 1272 | 1902 | 2202 | 2743 | 3131 | 3770 † | 3904 | 5395 |
| | 117.2 | 5.0 | 172 | 242 | 381 | 608 | 845 | 1270 | 1892 | 2209 | 2752 | 3157 | 3498 † | 3875 | 5392 |
| | 129.7 | 4.5 | 168 | 265 | 387 | 593 | 861 | 1269 | 1894 | 2205 | 2745 | 3116 | 3500 † | 3866 | 5458 |
| | 143.6 | 4.1 | 175 | 265 | 390 | 593 | 855 | 1272 | 1899 | 2446 | 2726 | 3048 | 3789 † | 3932 | 5462 |
| | 158.9 | 3.8 | 164 | 254 | 387 | 593 | 862 | 1269 | 1907 | 2205 | 2746 | 3137 | 3801 † | 3910 | 5492 |
| | 175.9 | 3.3 | 176 | 242 | 388 | 608 | 846 | 1272 | 1892 | 2206 | 2741 | 3154 | 3512 † | 3940 | 5460 |
| | 194.6 | 3.0 | 168 | 265 | 382 | 593 | 861 | 1268 | 1900 | 2198 | 2473 | 3117 | 3511 † | 3947 | 5488 |
| | 215.4 | 2.7 | 174 | 255 | 384 | 593 | 788 | 1272 | 1900 | 2206 | 2758 | 3120 | 3819 † | 3942 | 5449 |
| | 238.4 | 2.5 | 164 | 242 | 386 | 593 | 862 | 1271 | 1901 | 2208 | 2746 | 3129 | 3811 † | 3900 | 5482 |
| | 263.8 | 2.2 | 176 | 254 | 387 | 594 | 769 | 1273 | 1902 | 2208 | 2750 | 3157 | 3540 † | 3937 | 5446 |
| | 291.9 | 2.0 | 176 | 242 | 385 | 595 | 787 | 1271 | 1900 | 2149 | 2464 | 3131 | 3545 † | 3948 | 5495 |
| | 323.1 | 1.8 | 153 | 242 | 389 | 595 | 769 | 1274 | 1902 | 2151 | 2461 | 3153 | 3536 † | 3599 | 5497 |
| | 357.5 | 1.6 | . . . | 242 | 389 | 502 | 772 | 1272 | 1845 | 2149 | 2464 | 2715 | 3541 † | 3596 | 5476 |

† For Size 555ABRJ drives (hollow low speed shaft with shrink disc connection), the maximum output torque rating is limited to 3,100,000 lb-in by the shrink disc, and this shrink disc torque rating supersedes any higher torque ratings for the 555 that may be shown on Torqed by the sue Pages 71, 73, 75, and 77. In those cases where your 555ABRJ is selected at a High Speed Shaft rpm and Nominal Ratio where the torque rating of the gear drive is limithrink disc (3,100,000 lb-in), you must calculate an Equivalent Power Rating (hp) for the 555ABRJ gear drive using the formula below:

$$\frac{3{,}100{,}000 \text{ lb-in}}{\text{Torque Rating (lb-in) from Pages 71, 73, 75 or 77}} \times \text{Power Rating (hp) from Pages 70, 72, 74, or 76} = \text{Equivalent Power Rating (hp)}$$

| High Speed Shaft rpm | AVAILABILITY OF TYPES AB / ABR / ABX TRIPLE & QUADRUPLE REDUCTION TYPE | 385 | 405 | 425 | 445 | 465 | 485 | 505 | 525 | 535 | 545 | 555 | 565 | 585 |
|---|---|---|---|---|---|---|---|---|---|---|---|---|---|---|
| All | AB | X | X | X | X | X | X | X | X | . . . | X | . . . | X | X |
| | ABR | . . . | X | X | X | X | X | X | . . . | X | . . . | X | . . . | . . . |
| | ABX | . . . | X | X | X | X | X | X | . . . | X | . . . | X | . . . | . . . |

© Rexnord Industries,LLC, 1998, 2009.

Type AB

# Basic Thermal Horsepower Ratings ★/Double Reduction

| Nominal Ratios | High Speed Shaft rpm | Auxiliary Cooling | DRIVE SIZE 385 | 405 | 425 | 445 | 465 | 485 | 505 | 525 |
|---|---|---|---|---|---|---|---|---|---|---|
| 5.06 thru 6.86 | 1750 | None | 103 | 130 | 119 | 212 | 257 | | | |
| | | Shaft Fan | 210 | 290 | 365 | 605 | 670 | | | |
| | | Electric Fan | 472 | 641 | 786 | 1209 | 2146 | | | |
| | | Cooling Tubes | 523 | 854 | 1140 | 2109 | 2568 | | | |
| | 1430 | None | 114 | 149 | 155 | 256 | 315 | | | |
| | | Shaft Fan | 201 | 277 | 353 | 573 | 654 | | | |
| | | Electric Fan | 456 | 621 | 772 | 1181 | 2071 | | | |
| | | Cooling Tubes | 493 | 803 | 1082 | 1986 | 2450 | | | |
| | 1170 | None | 120 | 158 | 177 | 283 | 347 | | | |
| | | Shaft Fan | 191 | 261 | 336 | 538 | 628 | | | |
| | | Electric Fan | 438 | 598 | 751 | 1144 | 1990 | | | |
| | | Cooling Tubes | 461 | 750 | 1018 | 1863 | 2309 | | | |
| | 870 | None | 123 | 163 | 192 | 299 | 370 | | | |
| | | Shaft Fan | 174 | 239 | 310 | 487 | 582 | | | |
| | | Electric Fan | 410 | 561 | 713 | 1082 | 1867 | | | |
| | | Cooling Tubes | 414 | 671 | 917 | 1669 | 2104 | | | |
| | 720 | None | 122 | 162 | 195 | 301 | 373 | | | |
| | | Shaft Fan | 163 | 225 | 293 | 456 | 550 | | | |
| | | Electric Fan | 392 | 538 | 686 | 1040 | 1815 | | | |
| | | Cooling Tubes | 385 | 622 | 853 | 1551 | 1963 | | | |
| | 580 | None | 120 | 159 | 195 | 298 | 371 | | | |
| | | Shaft Fan | 153 | 209 | 273 | 422 | 515 | | | |
| | | Electric Fan | 371 | 510 | 656 | 991 | 1702 | | | |
| | | Cooling Tubes | 353 | 569 | 783 | 1416 | 1810 | | | |
| 7.59 thru 10.29 | 1750 | None | 98.8 | 128 | 126 | 215 | 263 | 201 | | |
| | | Shaft Fan | 192 | 266 | 335 | 542 | 647 | 665 | | |
| | | Electric Fan | 409 | 553 | 675 | 1010 | 1843 | 1942 | | |
| | | Cooling Tubes | 434 | 702 | 927 | 1622 | 2121 | 2145 | | |
| | 1430 | None | 105 | 137 | 148 | 238 | 298 | 264 | 280 | 426 |
| | | Shaft Fan | 180 | 249 | 316 | 499 | 608 | 637 | 794 | 1120 |
| | | Electric Fan | 393 | 531 | 656 | 973 | 1764 | 1887 | 2126 | 2963 |
| | | Cooling Tubes | 407 | 652 | 867 | 1475 | 2004 | 2057 | 2298 | 3443 |
| | 1170 | None | 108 | 142 | 160 | 249 | 316 | 301 | 336 | 488 |
| | | Shaft Fan | 168 | 230 | 295 | 459 | 570 | 604 | 752 | 1054 |
| | | Electric Fan | 375 | 507 | 633 | 934 | 1685 | 1823 | 2065 | 2872 |
| | | Cooling Tubes | 378 | 605 | 817 | 1410 | 1874 | 1945 | 2192 | 3308 |
| | 870 | None | 107 | 142 | 168 | 253 | 325 | 329 | 380 | 537 |
| | | Shaft Fan | 151 | 208 | 266 | 407 | 514 | 553 | 686 | 955 |
| | | Electric Fan | 349 | 472 | 596 | 874 | 1571 | 1724 | 1962 | 2724 |
| | | Cooling Tubes | 338 | 538 | 731 | 1256 | 1692 | 1775 | 2015 | 3067 |
| | 720 | None | 106 | 140 | 167 | 250 | 324 | 336 | 392 | 549 |
| | | Shaft Fan | 141 | 193 | 249 | 377 | 480 | 521 | 645 | 895 |
| | | Electric Fan | 332 | 450 | 572 | 835 | 1499 | 1658 | 1891 | 2627 |
| | | Cooling Tubes | 313 | 497 | 678 | 1159 | 1575 | 1669 | 1898 | 2897 |
| | 580 | None | 102 | 136 | 164 | 245 | 318 | 337 | 396 | 552 |
| | | Shaft Fan | 131 | 178 | 230 | 346 | 443 | 485 | 599 | 831 |
| | | Electric Fan | 314 | 425 | 543 | 792 | 1421 | 1584 | 1809 | 2514 |
| | | Cooling Tubes | 287 | 453 | 621 | 1058 | 1440 | 1534 | 1763 | 2703 |
| 11.39 thru 17.09 | 1750 | None | 86.2 | 114 | 117 | 192 | 250 | 192 | | |
| | | Shaft Fan | 160 | 226 | 278 | 450 | 576 | 557 | | |
| | | Electric Fan | 326 | 450 | 529 | 803 | 1490 | 1531 | | |
| | | Cooling Tubes | 326 | 536 | 679 | 1206 | 1639 | 1622 | | |
| | 1430 | None | 88.5 | 118 | 127 | 202 | 266 | 229 | 273 | 401 |
| | | Shaft Fan | 148 | 208 | 256 | 408 | 527 | 522 | 710 | 989 |
| | | Electric Fan | 310 | 429 | 508 | 768 | 1415 | 1476 | 1814 | 2503 |
| | | Cooling Tubes | 303 | 497 | 634 | 1115 | 1528 | 1540 | 1874 | 2820 |
| | 1170 | None | 88.5 | 119 | 132 | 205 | 271 | 251 | 309 | 441 |
| | | Shaft Fan | 136 | 191 | 235 | 371 | 482 | 488 | 662 | 917 |
| | | Electric Fan | 294 | 407 | 487 | 731 | 1343 | 1418 | 1751 | 2411 |
| | | Cooling Tubes | 281 | 460 | 589 | 1037 | 1422 | 1445 | 1780 | 2685 |
| | 870 | None | 86.1 | 116 | 133 | 204 | 269 | 266 | 335 | 467 |
| | | Shaft Fan | 121 | 169 | 209 | 323 | 424 | 439 | 594 | 818 |
| | | Electric Fan | 271 | 376 | 453 | 679 | 1241 | 1330 | 1653 | 2272 |
| | | Cooling Tubes | 249 | 405 | 524 | 915 | 1265 | 1310 | 1628 | 2497 |
| | 720 | None | 83.7 | 113 | 131 | 199 | 264 | 267 | 340 | 472 |
| | | Shaft Fan | 112 | 156 | 193 | 297 | 392 | 410 | 554 | 761 |
| | | Electric Fan | 258 | 358 | 433 | 646 | 1180 | 1275 | 1588 | 2183 |
| | | Cooling Tubes | 230 | 374 | 483 | 843 | 1176 | 1225 | 1522 | 2321 |
| | 580 | None | 80.6 | 109 | 127 | 192 | 256 | 264 | 339 | 469 |
| | | Shaft Fan | 101 | 143 | 177 | 271 | 358 | 379 | 511 | 701 |
| | | Electric Fan | 243 | 338 | 410 | 610 | 1115 | 1213 | 1515 | 2083 |
| | | Cooling Tubes | 218 | 340 | 441 | 765 | 1066 | 1124 | 1410 | 2162 |

(See ★ footnote on Page 80.)



© Rexnord Industries, LLC, 1998, 2009.

Type AB, ABR & ABX

# Basic Thermal Horsepower Ratings ★/Triple Reduction

| Nominal Ratios | High Speed Shaft rpm | Auxiliary Cooling | DRIVE SIZE 385 | 405 | 425 | 445 | 465 | 485 | 505 | 525 | 535 | 545 | 555 | 565 | 585 |
|---|---|---|---|---|---|---|---|---|---|---|---|---|---|---|---|
| 13.95 thru 17.09 Notice: 13.95:1 Not Available for Size 555 | 1750 | None ▲ | .... | 125 | 140 | 210 | 235 | 257 | 298 | .... | 414 | 485 | 515 | .... | .... |
| | | Shaft Fan • | .... | 188 | 236 | 363 | 446 | 560 | | | | | | | |
| | | Electric Fan | .... | 404 | 529 | 787 | 984 | 1199 | | | | | | | |
| | | Cooling Tubes | .... | 354 | 757 | 1026 | 1269 | 1910 | | | | | | | |
| | 1430 | None ▲ | .... | 122 | 142 | 209 | 243 | 284 | 333 | .... | 454 | 531 | 565 | 636 | 811 |
| | | Shaft Fan • | .... | 173 | 219 | 332 | 412 | 520 | | | | | | | |
| | | Electric Fan | .... | 385 | 504 | 748 | 930 | 1152 | | | | | | | |
| | | Cooling Tubes | .... | 311 | 708 | 960 | 1181 | 1804 | | | | | | | |
| | 1170 | None ▲ | .... | 116 | 142 | 208 | 245 | 293 | 352 | .... | 473 | 553 | 589 | 662 | 845 |
| | | Shaft Fan • | .... | 156 | 204 | 308 | 380 | 484 | | | | | | | |
| | | Electric Fan | .... | 359 | 477 | 705 | 885 | 1104 | | | | | | | |
| | | Cooling Tubes | .... | 288 | 651 | 878 | 1082 | 1645 | | | | | | | |
| | 870 | None ▲ | .... | 101 | 137 | 201 | 244 | 299 | 360 | .... | 477 | 559 | 594 | 669 | 854 |
| | | Shaft Fan • | .... | 130 | 183 | 270 | 338 | 432 | | | | | | | |
| | | Electric Fan | .... | 321 | 436 | 650 | 819 | 1029 | | | | | | | |
| | | Cooling Tubes | .... | 292 | 555 | 762 | 951 | 1469 | | | | | | | |
| | 720 | None ▲ | .... | 97.7 | 123 | 193 | 235 | 296 | 358 | .... | 473 | 553 | 589 | 662 | 845 |
| | | Shaft Fan • | .... | 121 | 160 | 250 | 314 | 405 | | | | | | | |
| | | Electric Fan | .... | 305 | 406 | 611 | 776 | 972 | | | | | | | |
| | | Cooling Tubes | .... | 270 | 570 | 695 | 878 | 1375 | | | | | | | |
| | 580 | None ▲ | .... | 94.8 | 122 | 174 | 209 | 284 | 351 | .... | 461 | 540 | 573 | 646 | 825 |
| | | Shaft Fan • | .... | 113 | 147 | 222 | 274 | 378 | | | | | | | |
| | | Electric Fan | .... | 287 | 385 | 572 | 724 | 937 | | | | | | | |
| | | Cooling Tubes | .... | 250 | 517 | 717 | 894 | 1257 | | | | | | | |
| 18.91 thru 38.44 | 1750 | None ▲ | 85.4 | 112 | 126 | 187 | 213 | 242 | 291 | 388 | 412 | 483 | 514 | .... | .... |
| | | Shaft Fan • | 128 | 166 | 207 | 316 | 388 | 491 | 631 † | 823 | | | | | |
| | | Electric Fan | 278 | 357 | 454 | 670 | 831 | 1026 | 1802 † | 2313 | | | | | |
| | | Cooling Tubes | 234 | 294 | 624 | 837 | 1026 | 1551 | 1839 † | 2162 | | | | | |
| | 1430 | None ▲ | 79.0 | 103 | 125 | 185 | 215 | 254 | 311 | 409 | 435 | 509 | 541 | 609 | 777 |
| | | Shaft Fan • | 113 | 146 | 189 | 287 | 354 | 452 | 581 † | 754 | | | | | |
| | | Electric Fan | 257 | 329 | 428 | 632 | 787 | 980 | 1712 † | 2193 | | | | | |
| | | Cooling Tubes | 224 | 284 | 572 | 769 | 948 | 1445 | 1722 † | 2045 | | | | | |
| | 1170 | None ▲ | 76.6 | 99.5 | 118 | 180 | 214 | 258 | 319 | 416 | 442 | 517 | 550 | 619 | 790 |
| | | Shaft Fan • | 104 | 133 | 169 | 261 | 325 | 415 | 535 † | 693 | | | | | |
| | | Electric Fan | 242 | 308 | 400 | 595 | 774 | 934 | 1624 † | 2078 | | | | | |
| | | Cooling Tubes | 206 | 260 | 544 | 703 | 874 | 1343 | 1616 † | 1910 | | | | | |
| | 870 | None ▲ | 69.0 | 89.5 | 115 | 166 | 199 | 243 | 318 | 412 | 438 | 512 | 545 | 613 | 782 |
| | | Shaft Fan • | 88.3 | 114 | 151 | 225 | 279 | 357 | 474 † | 611 | | | | | |
| | | Electric Fan | 219 | 278 | 368 | 540 | 680 | 856 | 1501 † | 1918 | | | | | |
| | | Cooling Tubes | 194 | 246 | 475 | 643 | 802 | 1243 | 1444 † | 1722 | | | | | |
| | 720 | None ▲ | 67.3 | 86.6 | 106 | 161 | 195 | 241 | 302 | 404 | 429 | 502 | 534 | 601 | 767 |
| | | Shaft Fan • | 83.1 | 106 | 136 | 208 | 260 | 334 | 430 † | 566 | | | | | |
| | | Electric Fan | 207 | 263 | 345 | 511 | 646 | 818 | 1418 † | 1822 | | | | | |
| | | Cooling Tubes | 179 | 227 | 462 | 590 | 740 | 1152 | 1392 † | 1604 | | | | | |
| | 580 | None ▲ | 64.9 | 82.5 | 104 | 149 | 181 | 236 | 297 | 380 | 404 | 473 | 503 | 566 | 722 |
| | | Shaft Fan • | 77.2 | 98.3 | 127 | 187 | 232 | 309 | 398 † | 509 | | | | | |
| | | Electric Fan | 194 | 247 | 325 | 476 | 603 | 775 | 1340 † | 1708 | | | | | |
| | | Cooling Tubes | 163 | 206 | 417 | 571 | 714 | 1051 | 1280 † | 1540 | | | | | |
| 42.54 thru 78.16 | 1750 | None ▲ | 60.8 | 85.4 | 95.9 | 139 | 180 | 207 | 256 | 354 | 376 | 440 | 468 | .... | .... |
| | | Shaft Fan • | 90.7 | 126 | 155 | 235 | 309 | 386 | 498 † | 683 | | | | | |
| | | Electric Fan | 197 | 270 | 338 | 497 | 639 | 771 | 1331 † | 1814 | | | | | |
| | | Cooling Tubes | 162 | 221 | 444 | 599 | 720 | 1065 | 1256 † | 1610 | | | | | |
| | 1430 | None ▲ | 56.2 | 77.8 | 94.8 | 137 | 165 | 190 | 256 | 352 | 374 | 438 | 466 | 524 | 669 |
| | | Shaft Fan • | 79.6 | 109 | 142 | 214 | 268 | 333 | 449 † | 614 | | | | | |
| | | Electric Fan | 181 | 248 | 318 | 467 | 591 | 715 | 1251 † | 1705 | | | | | |
| | | Cooling Tubes | 156 | 216 | 406 | 549 | 687 | 1020 | 1162 † | 1498 | | | | | |
| | 1170 | None ▲ | 53.8 | 74.9 | 87.8 | 135 | 162 | 191 | 238 | 325 | 346 | 405 | 431 | 484 | 618 |
| | | Shaft Fan • | 73.1 | 101 | 126 | 194 | 245 | 305 | 392 † | 536 | | | | | |
| | | Electric Fan | 170 | 232 | 295 | 439 | 558 | 678 | 1165 † | 1586 | | | | | |
| | | Cooling Tubes | 143 | 198 | 388 | 502 | 631 | 944 | 1116 † | 1434 | | | | | |
| | 870 | None ▲ | 51.5 | 70.2 | 84.8 | 123 | 150 | 177 | 233 | 319 | 339 | 397 | 423 | 476 | 607 |
| | | Shaft Fan • | 64.4 | 88.9 | 112 | 166 | 209 | 259 | 345 † | 470 | | | | | |
| | | Electric Fan | 154 | 211 | 271 | 397 | 506 | 617 | 1070 † | 1457 | | | | | |
| | | Cooling Tubes | 126 | 173 | 339 | 461 | 581 | 877 | 993 † | 1294 | | | | | |
| | 720 | None ▲ | 49.1 | 67.3 | 82.5 | 119 | 147 | 175 | 219 | 311 | 331 | 387 | 412 | 463 | 591 |
| | | Shaft Fan • | 60.3 | 81.9 | 104 | 154 | 194 | 242 | 309 † | 434 | | | | | |
| | | Electric Fan | 146 | 199 | 256 | 376 | 480 | 589 | 1005 † | 1381 | | | | | |
| | | Cooling Tubes | 115 | 159 | 310 | 422 | 535 | 810 | 962 † | 1200 | | | | | |
| | 580 | None ▲ | 46.2 | 63.8 | 79.0 | 113 | 141 | 170 | 214 | 290 | 308 | 360 | 383 | 431 | 550 |
| | | Shaft Fan • | 55.0 | 74.9 | 95.9 | 142 | 178 | 223 | 285 † | 387 | | | | | |
| | | Electric Fan | 136 | 186 | 241 | 352 | 451 | 556 | 946 † | 1289 | | | | | |
| | | Cooling Tubes | 105 | 143 | 280 | 381 | 485 | 739 | 880 † | 1155 | | | | | |

Triple reduction sizes and ratios in the screened areas are offered for Types ABR and ABX only, see other footnotes on Page 80.

© Rexnord Industries,LLC, 1998, 2009.

Type AB, ABR & ABX

# Basic Thermal Horsepower Ratings ★/Quadruple Reduction

| Nominal Ratios | High Speed Shaft rpm | Auxiliary Cooling | DRIVE SIZE 385 | 405 | 425 | 445 | 465 | 485 | 505 | 525 | 535 | 545 | 555 | 565 | 585 |
|---|---|---|---|---|---|---|---|---|---|---|---|---|---|---|---|
| 78.16 thru 158.9 | 1750 | None ▲ | 48.6 | 60.8 | 81.3 | 111 | 129 | 161 | 242 | 290 | 307 | 363 | 380 | 442 | 550 |
| | | Shaft Fan • | NA | NA | 120 | 163 | 204 | 273 | 398 † | 480 | | | | | |
| | | Electric Fan | 156 | 192 | 278 | 385 | 484 | 644 | 1181 † | 1429 | | | | | |
| | | Cooling Tubes | NA | NA | NA | 313 | 387 | 504 | 628 † | 729 | | | | | |
| | 1430 | None ▲ | 46.8 | 58.5 | 79.6 | 108 | 129 | 164 | 209 | 253 | 270 | 317 | 333 | 386 | 481 |
| | | Shaft Fan • | NA | NA | 111 | 150 | 188 | 253 | 335 † | 407 | | | | | |
| | | Electric Fan | 146 | 180 | 261 | 361 | 456 | 610 | 1080 † | 1310 | | | | | |
| | | Cooling Tubes | NA | NA | NA | 289 | 359 | 472 | 606 † | 697 | | | | | |
| | 1170 | None ▲ | 45.0 | 56.2 | 77.2 | 105 | 127 | 164 | 210 | 255 | 271 | 319 | 336 | 389 | 484 |
| | | Shaft Fan • | NA | NA | 101 | 137 | 174 | 235 | 309 † | 376 | | | | | |
| | | Electric Fan | 136 | 167 | 245 | 339 | 428 | 577 | 1015 † | 1234 | | | | | |
| | | Cooling Tubes | NA | NA | NA | 266 | 331 | 440 | 566 † | 654 | | | | | |
| | 870 | None ▲ | 41.5 | 51.5 | 72.5 | 98.9 | 121 | 159 | 205 | 249 | 264 | 311 | 327 | 379 | 472 |
| | | Shaft Fan • | NA | NA | 90.0 | 122 | 154 | 209 | 276 † | 335 | | | | | |
| | | Electric Fan | 123 | 151 | 223 | 309 | 391 | 531 | 926 † | 1128 | | | | | |
| | | Cooling Tubes | NA | NA | NA | 234 | 293 | 394 | 506 † | 588 | | | | | |
| | 720 | None ▲ | 39.8 | 48.6 | 69.6 | 94.2 | 116 | 155 | 198 | 241 | 257 | 302 | 318 | 368 | 458 |
| | | Shaft Fan • | NA | NA | 84.0 | 113 | 143 | 195 | 256 † | 312 | | | | | |
| | | Electric Fan | 116 | 142 | 209 | 291 | 369 | 503 | 873 † | 1065 | | | | | |
| | | Cooling Tubes | NA | NA | NA | 216 | 270 | 365 | 469 † | 548 | | | | | |
| | 580 | None ▲ | 37.4 | 45.6 | 65.5 | 88.9 | 111 | 148 | 190 | 232 | 246 | 290 | 305 | 353 | 440 |
| | | Shaft Fan • | NA | NA | 77.0 | 104 | 131 | 181 | 235 † | 288 | | | | | |
| | | Electric Fan | 108 | 132 | 196 | 272 | 345 | 472 | 817 † | 999 | | | | | |
| | | Cooling Tubes | NA | NA | NA | 197 | 246 | 334 | 430 † | 504 | | | | | |
| 175.9 thru 357.5 | 1750 | None ▲ | 38.6 | 49.1 | 62.6 | 87.8 | 106 | 139 | 185 | 223 | 239 | 280 | 296 | 341 | 424 |
| | | Shaft Fan • | NA | NA | 89.5 | 125 | 160 | 222 | 308 † | 371 | | | | | |
| | | Electric Fan | 122 | 150 | 201 | 285 | 367 | 498 | 916 † | 1103 | | | | | |
| | | Cooling Tubes | NA | NA | NA | 215 | 269 | 364 | 487 † | 559 | | | | | |
| | 1430 | None ▲ | 37.4 | 46.2 | 60.3 | 83.1 | 103 | 136 | 182 | 220 | 234 | 275 | 289 | 335 | 418 |
| | | Shaft Fan • | NA | NA | 81.3 | 113 | 146 | 202 | 278 † | 337 | | | | | |
| | | Electric Fan | 113 | 140 | 187 | 266 | 342 | 467 | 854 † | 1029 | | | | | |
| | | Cooling Tubes | NA | NA | NA | 197 | 248 | 338 | 452 † | 521 | | | | | |
| | 1170 | None ▲ | 35.1 | 43.9 | 56.7 | 79.6 | 98.3 | 132 | 177 | 214 | 228 | 267 | 281 | 326 | 405 |
| | | Shaft Fan • | NA | NA | 73.7 | 102 | 133 | 184 | 253 † | 307 | | | | | |
| | | Electric Fan | 105 | 129 | 175 | 249 | 321 | 439 | 798 † | 962 | | | | | |
| | | Cooling Tubes | NA | NA | NA | 181 | 228 | 313 | 418 † | 482 | | | | | |
| | 870 | None ▲ | 32.2 | 40.4 | 52.7 | 73.1 | 91.8 | 125 | 167 | 202 | 215 | 253 | 266 | 308 | 383 |
| | | Shaft Fan • | NA | NA | 64.9 | 90.7 | 116 | 161 | 221 † | 268 | | | | | |
| | | Electric Fan | 95.4 | 116 | 158 | 225 | 290 | 400 | 723 † | 873 | | | | | |
| | | Cooling Tubes | NA | NA | NA | 159 | 201 | 277 | 370 † | 430 | | | | | |
| | 720 | None ▲ | 31.0 | 37.4 | 50.3 | 69.6 | 87.2 | 120 | 159 | 192 | 205 | 241 | 253 | 294 | 365 |
| | | Shaft Fan • | NA | NA | 60.0 | 83.0 | 108 | 150 | 204 † | 247 | | | | | |
| | | Electric Fan | 89.5 | 109 | 148 | 211 | 273 | 377 | 679 † | 823 | | | | | |
| | | Cooling Tubes | NA | NA | NA | 146 | 185 | 256 | 343 † | 398 | | | | | |
| | 580 | None ▲ | 28.7 | 35.1 | 47.4 | 65.5 | 83.1 | 113 | 152 | 183 | 194 | 229 | 240 | 278 | 347 |
| | | Shaft Fan • | NA | NA | 54.4 | 76.6 | 100 | 137 | 186 † | 226 | | | | | |
| | | Electric Fan | 83.1 | 101 | 138 | 197 | 254 | 352 | 633 † | 768 | | | | | |
| | | Cooling Tubes | NA | NA | NA | 133 | 167 | 233 | 312 † | 364 | | | | | |

★ Basic thermal ratings in hp are shown for an ambient temperature of 80°F (27°C) and at an altitude of sea level to 2500 feet. For other ambient temperatures, other altitudes, or special air velocity / inlet water temperature / duty cycle considerations, use thermal factors on Page 10 to determine an application adjusted thermal rating which can then be compared to the actual power transmitted. Thermal ratings for cooling tubes are based on water inlet temperature of 70°F (21°C), and water flow rates as shown on Page 12. For cooling capacity exceeding the methods listed for the gear drive size, ratio, and high speed shaft rpm that you have selected, consult your Rexnord representative for an external heat exchanger package.

▲ For Type ABX, apply a multiplier of 0.8 to thermal ratings with no auxiliary cooling.

• For Type ABX, apply a multiplier of 0.9 to thermal ratings with shaft fan.

† Ratings shown for shaft fan, electric fan, and cooling tubes apply to Size 505AB only. Consult Factory for 505ABR and 505ABX.



© Rexnord Industries, LLC, 1998, 2009.

# Type AB, ABR & ABX Overhung Loads

## High & Low Speed Shaft

$$\text{Overhung Load (lb)} = \frac{126{,}000 \times hp \times F_c \times L_f}{\text{Pitch Dia (in)} \times rpm}$$

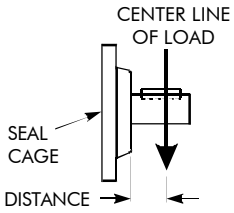


**$F_c$ = Load Connection Factor.**

Sprocket ★ . . . . . 1.00
Machined Pinion & Gear ★ . . . . . 1.25
Synchronous (Timing) Belt . . . . . 1.30
V–Belt . . . . . 1.50
Flat Belt . . . . . 2.50

**$L_f$ = Load Location Factor.**

Low Speed Shaft – See table below.
High Speed Shaft – See instructions at right.

★ Refer all multiple chain sprocket and pinion mounted applications to the Factory for deflection analysis.

**Overhung Loads** — Overhung load is imposed upon a shaft when a pinion, sprocket or sheave is used as a power take-off. The magnitude of the load varies with the type of take-off and its proximity to the shaft bearing. Calculate the load (including minimum required service factor) and check the result against the tabulated overhung load rating. The above overhung load formula considers the transmitted power rating, without service factor. This is appropriate for applications where starting loads, momentary overloads and brake capacities do not exceed 200% of drive rating (100% overload). For other conditions, compute the equivalent power by multiplying the transmitted power by the appropriate service factor.

**Locate the center line of the load** as close to the gear drive seal cage as practical to minimize the effect of the overhung load and increase bearing life.

**Consult Factory for Higher Overhung Load Ratings** — In many cases, overhung load capacity in excess of that published is available. If the actual load should exceed the published capacity, refer full details to the Factory; provide complete application information (see Page 9), as well as direction of rotation, location and direction of applied load.

## LOW SPEED SHAFT

Calculate low speed shaft overhung load using the formula and $F_c$ values at left. The $L_f$ load location factors tabulated below are based on the distance from the center line of the load to the gear drive seal cage.

**Low speed shaft overhung load example** – An application requiring 115 hp is driven by a 385AB2 drive with 100 rpm output. An 18" pitch diameter single-chain sprocket is mounted on the low speed shaft and the center line of the load is 5 inches from the seal cage. Calculate the overhung load:

$$\text{Overhung Load} = \frac{126{,}000 \times 115 \times 1.0 \times 1.05}{18 \times 100} = 8453 \text{ pounds}$$

Refer to the Type AB2 table on Page 84 and note that the overhung load capacity for a 385AB2 at 100 rpm is 12,500 pounds (12.5 x 1000) and is satisfactory for this selection.

## HIGH SPEED SHAFT

High speed shaft overhung load ratings published on Pages 82 & 83 are for normal conditions where the center line of the load is one shaft diameter from the seal cage, and for speeds of 1170 rpm or lower. Where the center line of the load is one

Type AB

## $L_f$ Load Location Factors *

### Low Speed Shaft

Based on distance from center line of load to gear drive seal cage.

| Distance in Inches | DOUBLE REDUCTION | | | | | | | |
|---|---|---|---|---|---|---|---|---|
| | DRIVE SIZE | | | | | | | |
| | 385 | 405 | 425 | 445 | 465 | 485 | 505 | 525 |
| 2 | .89 | .87 | .86 | .86 | .85 | .81 | .81 | .80 |
| 2.5 | .91 | .90 | .88 | .87 | .86 | .83 | .82 | .81 |
| 3 | .93 | .92 | .90 | .89 | .87 | .84 | .84 | .82 |
| 3.5 | .96 | .94 | .91 | .90 | .89 | .86 | .85 | .83 |
| 4 | .98 | .96 | .93 | .92 | .90 | .87 | .86 | .85 |
| 4.5 | 1.00 | .98 | .95 | .94 | .92 | .88 | .88 | .86 |
| 5 | 1.05 | 1.00 | .97 | .95 | .93 | .90 | .89 | .87 |
| 5.5 | 1.11 | 1.05 | .99 | .97 | .95 | .91 | .90 | .88 |
| 6 | 1.16 | 1.10 | 1.02 | .98 | .96 | .93 | .92 | .89 |
| 6.5 | 1.22 | 1.15 | 1.07 | 1.00 | .98 | .94 | .93 | .90 |
| 7 | 1.27 | 1.20 | 1.12 | 1.04 | .99 | .96 | .94 | .92 |
| 7.5 | 1.33 | 1.26 | 1.16 | 1.09 | 1.02 | .97 | .95 | .93 |
| 8 | . . . | 1.31 | 1.21 | 1.13 | 1.06 | .99 | .97 | .94 |
| 8.5 | . . . | 1.36 | 1.25 | 1.17 | 1.10 | 1.00 | .98 | .95 |
| 9 | . . . | . . . | 1.30 | 1.22 | 1.14 | 1.04 | .99 | .96 |
| 10 | . . . | . . . | 1.39 | 1.30 | 1.22 | 1.11 | 1.05 | .99 |
| 11 | . . . | . . . | . . . | 1.39 | 1.30 | 1.18 | 1.12 | 1.03 |
| 12 | . . . | . . . | . . . | . . . | 1.38 | 1.25 | 1.18 | 1.09 |
| 13 | . . . | . . . | . . . | . . . | . . . | 1.32 | 1.25 | 1.15 |
| 14 | . . . | . . . | . . . | . . . | . . . | 1.39 | 1.32 | 1.21 |
| 15 | Center line of load is | | | | . . . | . . . | 1.39 | 1.27 |
| 16 | beyond end of standard low | | | | . . . | . . . | 1.45 | 1.33 |
| 17 | speed shaft. Consult | | | | . . . | . . . | . . . | 1.39 |
| 18 | Factory for special shaft. | | | | . . . | . . . | . . . | 1.45 |

* Interpolate for intermediate values. For example, $L_f$ is .96 for a Size 425AB2 when the distance is 4.75 inches.

Type AB, ABR & ABX

## $L_f$ Load Location Factors *

### Low Speed Shaft

Based on distance from center line of load to gear drive seal cage.

| Distance in Inches | TRIPLE & QUADRUPLE REDUCTION | | | | | | | | | | | | |
|---|---|---|---|---|---|---|---|---|---|---|---|---|---|
| | DRIVE SIZE | | | | | | | | | | | | |
| | 385 | 405 | 425 | 445 | 465 | 485 | 505 | 525 | 535 | 545 | 555 | 565 | 585 |
| 2 | .87 | .86 | .84 | .83 | .82 | .82 | .81 | .80 | .77 | .80 | .81 | .81 | .81 |
| 2.5 | .90 | .88 | .86 | .85 | .84 | .83 | .82 | .81 | .79 | .81 | .82 | .82 | .82 |
| 3 | .92 | .91 | .88 | .87 | .85 | .85 | .84 | .82 | .80 | .82 | .83 | .83 | .83 |
| 3.5 | .95 | .93 | .91 | .89 | .87 | .86 | .85 | .83 | .81 | .83 | .84 | .84 | .84 |
| 4 | .97 | .95 | .93 | .91 | .89 | .88 | .86 | .85 | .83 | .84 | .85 | .84 | .85 |
| 4.5 | 1.00 | .98 | .95 | .92 | .91 | .89 | .88 | .86 | .84 | .85 | .86 | .85 | .86 |
| 5 | 1.05 | 1.00 | .97 | .94 | .92 | .91 | .89 | .87 | .85 | .86 | .87 | .86 | .87 |
| 5.5 | 1.11 | 1.05 | .99 | .96 | .94 | .92 | .90 | .88 | .87 | .87 | .88 | .87 | .87 |
| 6 | 1.16 | 1.10 | 1.02 | .98 | .96 | .94 | .92 | .89 | .88 | .88 | .89 | .88 | .88 |
| 6.5 | 1.22 | 1.15 | 1.07 | 1.00 | .97 | .95 | .93 | .90 | .89 | .89 | .90 | .89 | .89 |
| 7 | 1.27 | 1.20 | 1.12 | 1.04 | .99 | .97 | .94 | .92 | .91 | .90 | .91 | .90 | .90 |
| 7.5 | 1.33 | 1.26 | 1.16 | 1.09 | 1.02 | .98 | .95 | .93 | .92 | .91 | .92 | .91 | .91 |
| 8 | . . . | 1.31 | 1.21 | 1.13 | 1.06 | 1.00 | .97 | .94 | .93 | .92 | .93 | .92 | .92 |
| 8.5 | . . . | 1.36 | 1.26 | 1.17 | 1.10 | 1.03 | .98 | .95 | .95 | .93 | .94 | .93 | .92 |
| 9 | . . . | . . . | 1.30 | 1.22 | 1.14 | 1.07 | .99 | .96 | .96 | .94 | .95 | .94 | .93 |
| 10 | . . . | . . . | 1.40 | 1.30 | 1.22 | 1.14 | 1.05 | .99 | .99 | .96 | .97 | .96 | .95 |
| 11 | . . . | . . . | . . . | 1.39 | 1.30 | 1.21 | 1.12 | 1.03 | 1.03 | .99 | .99 | .98 | .97 |
| 12 | . . . | . . . | . . . | . . . | 1.38 | 1.27 | 1.18 | 1.09 | 1.09 | 1.02 | 1.03 | 1.00 | .98 |
| 13 | . . . | . . . | . . . | . . . | . . . | 1.34 | 1.25 | 1.15 | 1.15 | 1.07 | 1.08 | 1.04 | 1.00 |
| 14 | . . . | . . . | . . . | . . . | . . . | 1.41 | 1.32 | 1.21 | 1.20 | 1.13 | 1.13 | 1.09 | 1.05 |
| 15 | . . . | . . . | . . . | . . . | . . . | . . . | 1.39 | 1.27 | 1.26 | 1.18 | 1.18 | 1.14 | 1.10 |
| 16 | . . . | . . . | . . . | . . . | . . . | . . . | 1.45 | 1.33 | 1.32 | 1.24 | 1.23 | 1.19 | 1.15 |
| 17 | . . . | . . . | . . . | . . . | . . . | . . . | . . . | 1.39 | 1.38 | 1.29 | 1.28 | 1.25 | 1.19 |
| 18 | . . . | . . . | . . . | . . . | . . . | . . . | . . . | 1.45 | 1.44 | 1.34 | 1.33 | 1.30 | 1.24 |
| 19 | . . . | . . . | . . . | . . . | . . . | . . . | . . . | . . . | . . . | 1.40 | 1.39 | 1.35 | 1.29 |
| 20 | Center line of load is beyond end | | | | | | . . . | . . . | . . . | 1.45 | 1.44 | 1.40 | 1.34 |
| 21 | of standard low speed shaft. Consult | | | | | | . . . | . . . | . . . | . . . | . . . | 1.45 | 1.39 |
| 22 | Factory for special shaft. | | | | | | . . . | . . . | . . . | . . . | . . . | . . . | 1.44 |
| 23 | | | | | | | . . . | . . . | . . . | . . . | . . . | . . . | 1.48 |

* Interpolate for intermediate values. For example, $L_f$ is .99 for a Size 405AB3 when the distance is 4.75 inches. Consult Factory for Type ABXQ.

© Rexnord Industries,LLC, 1998, 2009.

## Type AB
# High Speed Shaft Overhung Load */Pounds

| High Speed Shaft rpm | Nom. Ratio ±4% | Approx. Low Speed Shaft rpm | DOUBLE REDUCTION DRIVE SIZE 385 | 405 | 425 | 445 | 465 | 485 | 505 | 525 |
|---|---|---|---|---|---|---|---|---|---|---|
| 1170 | 5.06 | 230 | 1600 | 2000 | 2500 | 3000 | 1450 | | | |
| | 5.60 | 210 | 1600 | 2000 | 2500 | 3000 | 1450 | | | |
| | 6.20 | 190 | 1600 | 2000 | 2500 | 3000 | 1450 | | | |
| | 6.86 | 170 | 1600 | 2000 | 2500 | 3000 | 1450 | | | |
| | 7.59 | 155 | 1600 | 2000 | 2500 | 3000 | 1790 | 4000 | 4700 | 5400 |
| | 8.40 | 140 | 1600 | 2000 | 2500 | 3000 | 2620 | 4000 | 4700 | 5400 |
| | 9.30 | 125 | 1600 | 2000 | 2500 | 3000 | 3340 | 4000 | 4700 | 5400 |
| | 10.29 | 115 | 1600 | 2000 | 2500 | 3000 | 3080 | 4000 | 4700 | 5400 |
| | 11.39 | 100 | 1600 | 2000 | 2500 | 3000 | 3500 | 4000 | 4700 | 5400 |
| 870 | 5.06 | 175 | 1600 | 2000 | 2500 | 3000 | 1980 | | | |
| | 5.60 | 155 | 1600 | 2000 | 2500 | 3000 | 1980 | | | |
| | 6.20 | 140 | 1600 | 2000 | 2500 | 3000 | 1980 | | | |
| | 6.86 | 130 | 1600 | 2000 | 2500 | 3000 | 1980 | | | |
| | 7.59 | 115 | 1600 | 2000 | 2500 | 3000 | 1980 | 4000 | 4700 | 5400 |
| | 8.40 | 105 | 1600 | 2000 | 2500 | 3000 | 3030 | 4000 | 4700 | 5400 |
| | 9.30 | 95 | 1600 | 2000 | 2500 | 3000 | 3500 | 4000 | 4700 | 5400 |
| | 10.29 | 85 | 1600 | 2000 | 2500 | 3000 | 3430 | 4000 | 4700 | 5400 |
| | 11.39 | 77 | 1600 | 2000 | 2500 | 3000 | 3500 | 4000 | 4700 | 5400 |
| 720 | 5.06 | 140 | 1600 | 2000 | 2500 | 3000 | 2420 | | | |
| | 5.60 | 130 | 1600 | 2000 | 2500 | 3000 | 2580 | | | |
| | 6.20 | 115 | 1600 | 2000 | 2500 | 3000 | 2420 | | | |
| | 6.86 | 105 | 1600 | 2000 | 2500 | 3000 | 2420 | | | |
| | 7.59 | 95 | 1600 | 2000 | 2500 | 3000 | 2420 | 4000 | 4700 | 5400 |
| | 8.40 | 85 | 1600 | 2000 | 2500 | 3000 | 3500 | 4000 | 4700 | 5400 |
| | 9.30 | 77 | 1600 | 2000 | 2500 | 3000 | 3500 | 4000 | 4700 | 5400 |
| 580 | 5.06 | 115 | 1600 | 2000 | 2500 | 3000 | 3100 | | | |
| | 5.60 | 105 | 1600 | 2000 | 2500 | 3000 | 3340 | | | |
| | 6.20 | 95 | 1600 | 2000 | 2500 | 3000 | 3010 | | | |
| | 6.86 | 85 | 1600 | 2000 | 2500 | 3000 | 3010 | | | |
| | 7.59 | 77 | 1600 | 2000 | 2500 | 3000 | 3080 | 4000 | 4700 | 5400 |
| | 8.40 | 70 | 1600 | 2000 | 2500 | 3000 | 3500 | 4000 | 4700 | 5400 |

## Type AB, ABR & ABX
# High Speed Shaft Overhung Load */Pounds

| High Speed Shaft rpm | Nominal Ratio ±5% | Approx. Low Speed Shaft rpm | QUADRUPLE REDUCTION DRIVE SIZE 385 | 405 | 425 | 445 | 465 | 485 | 505 | 525 | 535 | 545 | 555 | 565 | 585 |
|---|---|---|---|---|---|---|---|---|---|---|---|---|---|---|---|
| 1170 | 78.16 | 15.0 | 1300 ‡ | 910 | 1300 | 1600 | 2000 | 2500 | 3000 | 3500 | 3500 | 4000 | 4000 | 4700 | 3950 |
| | 86.50 | 13.5 | 700 | 980 | 1300 | 1600 | 2000 | 2500 | 3000 | 3500 | 3500 | 4000 | 4000 | 4700 | 4500 |
| | 95.73 | 12.0 | 700 | 1000 | 1300 | 1600 | 2000 | 2500 | 3000 | 3500 | 3500 | 4000 | 4000 | 4700 | 4700 |
| 870 | 78.16 | 11.0 | 1300 ‡ | 1000 | 1300 | 1600 | 2000 | 2500 | 3000 | 3500 | 3500 | 4000 | 4000 | 4700 | 4700 |
| | 86.50 | 10.0 | 700 | 1000 | 1300 | 1600 | 2000 | 2500 | 3000 | 3500 | 3500 | 4000 | 4000 | 4700 | 4700 |
| 720 | 78.16 | 9.1 | 1300 ‡ | 1000 | 1300 | 1600 | 2000 | 2500 | 3000 | 3500 | 3500 | 4000 | 4000 | 4700 | 4700 |
| | 86.50 | 8.3 | 700 | 1000 | 1300 | 1600 | 2000 | 2500 | 3000 | 3500 | 3500 | 4000 | 4000 | 4700 | 4700 |
| 580 | 78.16 | 7.5 | 1300 ‡ | 1000 | 1300 | 1600 | 2000 | 2500 | 3000 | 3500 | 3500 | 4000 | 4000 | 4700 | 4700 |
| | 86.50 | 6.8 | 700 | 1000 | 1300 | 1600 | 2000 | 2500 | 3000 | 3500 | 3500 | 4000 | 4000 | 4700 | 4700 |

* For loads applied one shaft diameter from seal cage and speeds of 1170 rpm or lower. In each High Speed Shaft rpm section, the last overhung load value applies to all of the higher ratios of that gear reduction. Published ratings are based on a combination of the most unfavorable conditions of loading. Consult Factory for ratings of drives with fans.

‡ Size 385 rating at 78.16:1 is for triple reduction.


© Rexnord Industries, LLC, 1998, 2009.

## Type AB, ABR & ABX

# High Speed Shaft Overhung Load */Pounds

| High Speed Shaft rpm | Nominal Ratio ±4% | Approx. Low Speed Shaft rpm | TRIPLE REDUCTION | | | | | | | | | | | | |
|---|---|---|---|---|---|---|---|---|---|---|---|---|---|---|---|
| | | | DRIVE SIZE | | | | | | | | | | | | |
| | | | 385 | 405 | 425 | 445 | 465 | 485 | 505 | 525 | 535 | 545 | 555 | 565 | 585 |
| 1170 | 13.95 | 84 | . . . | 1450 | 2000 | 2500 | 3000 | 2650 | 3410 | . . . | 1450 | 5400 | . . . | 1990 | 6000 |
| | 15.44 | 75 | . . . | 1450 | 2000 | 2500 | 3000 | 2650 | 3410 | . . . | 1450 | 5400 | 5400 | 1990 | 6000 |
| | 17.09 | 68 | . . . | 1450 | 2000 | 2500 | 3000 | 2730 | 3410 | . . . | 1450 | 5400 | 5400 | 1990 | 6000 |
| | 18.91 | 60 | 1300 | 1590 | 2000 | 2500 | 3000 | 2730 | 3410 | 1450 | 1450 | 5400 | 5400 | 1990 | 6000 |
| | 20.93 | 56 | 1300 | 1470 | 2000 | 2500 | 3000 | 2730 | 3730 | 1460 | 1450 | 5400 | 5400 | 1990 | 6000 |
| | 23.16 | 50 | 1300 | 1590 | 2000 | 2500 | 3000 | 2730 | 3730 | 1630 | 1630 | 5400 | 5400 | 3840 | 6000 |
| | 25.63 | 45 | 1300 | 1600 | 2000 | 2500 | 3000 | 3060 | 4000 | 2500 | 1630 | 5400 | 5400 | 6000 | 6000 |
| | 28.36 | 40 | 1300 | 1600 | 2000 | 2500 | 3000 | 3340 | 4000 | 3210 | 2540 | 5400 | 5400 | 6000 | 6000 |
| | 31.39 | 37 | 1300 | 1600 | 2000 | 2500 | 3000 | 3500 | 4000 | 2920 | 3210 | 5400 | 5400 | 6000 | 4760 |
| | 34.74 | 34 | 1300 | 1510 | 2000 | 2160 | 3000 | 3500 | 4000 | 3060 | 3000 | 5400 | 5400 | 6000 | 4760 |
| | 38.44 | 30 | 1300 | 1510 | 2000 | 2500 | 3000 | 3350 | 4000 | 4380 | 3110 | 5400 | 5400 | 6000 | 6000 |
| | 42.54 | 27 | 1300 | 1590 | 2000 | 2500 | 3000 | 3500 | 4000 | 4700 | 4410 | 5400 | 5400 | 6000 | 6000 |
| | 47.08 | 25 | 1300 | 1600 | 2000 | 2500 | 3000 | 3500 | 4000 | 3710 | 4700 | 5400 | 5400 | 6000 | 5690 |
| | 52.11 | 22 | 1300 | 1600 | 2000 | 2500 | 3000 | 3500 | 4000 | 3710 | 3710 | 5400 | 5400 | 6000 | 5690 |
| | 57.66 | 20 | 1300 | 1600 | 2000 | 2500 | 3000 | 3500 | 4000 | 4670 | 3710 | 5400 | 5400 | 6000 | 6000 |
| | 63.82 | 18.0 | 1300 | 1600 | 2000 | 2500 | 3000 | 3500 | 4000 | 4700 | 4700 | 5400 | 5400 | 6000 | 6000 |
| 870 | 13.95 | 62 | . . . | 1600 | 2000 | 2500 | 3000 | 3150 | 4000 | . . . | 1980 | 5400 | . . . | 4940 | 6000 |
| | 15.44 | 55 | . . . | 1600 | 2000 | 2500 | 3000 | 3150 | 4000 | . . . | 1980 | 5400 | 5400 | 4940 | 6000 |
| | 17.09 | 50 | . . . | 1600 | 2000 | 2500 | 3000 | 3360 | 4000 | . . . | 1980 | 5400 | 5400 | 4940 | 6000 |
| | 18.91 | 45 | 1300 | 1600 | 2000 | 2500 | 3000 | 3360 | 4000 | 1980 | 1980 | 5400 | 5400 | 4940 | 6000 |
| | 20.93 | 42 | 1300 | 1600 | 2000 | 2500 | 3000 | 3360 | 4000 | 2290 | 1980 | 5400 | 5400 | 4940 | 6000 |
| | 23.16 | 38 | 1300 | 1600 | 2000 | 2500 | 3000 | 3360 | 4000 | 2550 | 2550 | 5400 | 5400 | 6000 | 6000 |
| | 25.63 | 34 | 1300 | 1600 | 2000 | 2500 | 3000 | 3500 | 4000 | 3340 | 2550 | 5400 | 5400 | 6000 | 6000 |
| | 28.36 | 31 | 1300 | 1600 | 2000 | 2500 | 3000 | 3500 | 4000 | 4060 | 3390 | 5400 | 5400 | 6000 | 6000 |
| | 31.39 | 28 | 1300 | 1600 | 2000 | 2500 | 3000 | 3500 | 4000 | 3230 | 4060 | 5400 | 5400 | 6000 | 5220 |
| | 34.74 | 25 | 1300 | 1410 | 2000 | 1880 | 3000 | 3500 | 4000 | 3920 | 3860 | 5400 | 5400 | 6000 | 6000 |
| | 38.44 | 22 | 1300 | 1410 | 2000 | 2500 | 3000 | 3500 | 4000 | 4700 | 3970 | 5400 | 5400 | 6000 | 6000 |
| | 42.54 | 21 | 1300 | 1550 | 2000 | 2500 | 3000 | 3500 | 4000 | 4700 | 4700 | 5400 | 5400 | 6000 | 6000 |
| | 47.08 | 18.0 | 1300 | 1600 | 2000 | 2500 | 3000 | 3500 | 4000 | 4480 | 4700 | 5400 | 5400 | 6000 | 5690 |
| | 52.11 | 17.0 | 1300 | 1600 | 2000 | 2500 | 3000 | 3500 | 4000 | 4480 | 4480 | 5400 | 5400 | 6000 | 5690 |
| | 57.66 | 15.0 | 1300 | 1600 | 2000 | 2500 | 3000 | 3500 | 4000 | 4700 | 4480 | 5400 | 5400 | 6000 | 6000 |
| | 63.82 | 14.0 | 1300 | 1600 | 2000 | 2500 | 3000 | 3500 | 4000 | 4700 | 4700 | 5400 | 5400 | 6000 | 6000 |
| 720 | 13.95 | 50 | . . . | 1600 | 2000 | 2500 | 3000 | 3500 | 4000 | . . . | 2420 | 5400 | . . . | 6000 | 6000 |
| | 15.44 | 45 | . . . | 1600 | 2000 | 2500 | 3000 | 3500 | 4000 | . . . | 2420 | 5400 | 5400 | 6000 | 6000 |
| | 17.09 | 42 | . . . | 1600 | 2000 | 2500 | 3000 | 3500 | 4000 | . . . | 2420 | 5400 | 5400 | 6000 | 6000 |
| | 18.91 | 38 | 1300 | 1600 | 2000 | 2500 | 3000 | 3500 | 4000 | 2450 | 2440 | 5400 | 5400 | 6000 | 6000 |
| | 20.93 | 34 | 1300 | 1600 | 2000 | 2500 | 3000 | 3500 | 4000 | 2890 | 2440 | 5400 | 5400 | 6000 | 6000 |
| | 23.16 | 31 | 1300 | 1600 | 2000 | 2500 | 3000 | 3500 | 4000 | 3170 | 3170 | 5400 | 5400 | 6000 | 6000 |
| | 25.63 | 28 | 1300 | 1600 | 2000 | 2500 | 3000 | 3500 | 4000 | 3930 | 3170 | 5400 | 5400 | 6000 | 6000 |
| | 28.36 | 25 | 1300 | 1600 | 2000 | 2500 | 3000 | 3500 | 4000 | 4650 | 3980 | 5400 | 5400 | 6000 | 6000 |
| | 31.39 | 22 | 1300 | 1600 | 2000 | 2500 | 3000 | 3500 | 4000 | 3840 | 4660 | 5400 | 5400 | 6000 | 6000 |
| | 34.74 | 21 | 1300 | 1350 | 2000 | 1650 | 3000 | 3500 | 4000 | 4520 | 4460 | 5400 | 5400 | 6000 | 6000 |
| | 38.44 | 18.0 | 1300 | 1350 | 2000 | 2500 | 3000 | 3500 | 4000 | 4700 | 4560 | 5400 | 5400 | 6000 | 6000 |
| | 42.54 | 17.0 | 1300 | 1540 | 2000 | 2500 | 3000 | 3500 | 4000 | 4700 | 4700 | 5400 | 5400 | 6000 | 6000 |
| | 47.08 | 15.0 | 1300 | 1600 | 2000 | 2500 | 3000 | 3500 | 4000 | 4220 | 4700 | 5400 | 5400 | 6000 | 6000 |
| | 52.11 | 14.0 | 1300 | 1600 | 2000 | 2500 | 3000 | 3500 | 4000 | 4220 | 4220 | 5400 | 5400 | 6000 | 6000 |
| | 57.66 | 12.5 | 1300 | 1600 | 2000 | 2500 | 3000 | 3500 | 4000 | 4700 | 4220 | 5400 | 5400 | 6000 | 6000 |
| | 63.82 | 11.0 | 1300 | 1600 | 2000 | 2500 | 3000 | 3500 | 4000 | 4700 | 4700 | 5400 | 5400 | 6000 | 6000 |
| 580 | 13.95 | 42 | . . . | 1600 | 2000 | 2500 | 3000 | 3500 | 4000 | . . . | 3010 | 5400 | . . . | 6000 | 6000 |
| | 15.44 | 38 | . . . | 1600 | 2000 | 2500 | 3000 | 3500 | 4000 | . . . | 3010 | 5400 | 5400 | 6000 | 6000 |
| | 17.09 | 34 | . . . | 1600 | 2000 | 2500 | 3000 | 3500 | 4000 | . . . | 3010 | 5400 | 5400 | 6000 | 6000 |
| | 18.91 | 31 | 1300 | 1600 | 2000 | 2500 | 3000 | 3500 | 4000 | 3220 | 3220 | 5400 | 5400 | 6000 | 6000 |
| | 20.93 | 28 | 1300 | 1600 | 2000 | 2500 | 3000 | 3500 | 4000 | 3610 | 3220 | 5400 | 5400 | 6000 | 6000 |
| | 23.16 | 25 | 1300 | 1600 | 2000 | 2500 | 3000 | 3500 | 4000 | 3920 | 3920 | 5400 | 5400 | 6000 | 6000 |
| | 25.63 | 22 | 1300 | 1600 | 2000 | 2500 | 3000 | 3500 | 4000 | 4660 | 3920 | 5400 | 5400 | 6000 | 6000 |
| | 28.36 | 21 | 1300 | 1600 | 2000 | 2500 | 3000 | 3500 | 4000 | 4700 | 4700 | 5400 | 5400 | 6000 | 6000 |
| | 31.39 | 18.0 | 1300 | 1600 | 2000 | 2500 | 3000 | 3500 | 4000 | 4590 | 4700 | 5400 | 5400 | 6000 | 6000 |
| | 34.74 | 17.0 | 1300 | 1300 | 2000 | 1520 | 3000 | 3500 | 4000 | 4700 | 4700 | 5400 | 5400 | 6000 | 6000 |
| | 38.44 | 15.0 | 1300 | 1300 | 2000 | 2500 | 3000 | 3500 | 4000 | 4700 | 4700 | 5400 | 5400 | 6000 | 6000 |
| | 42.54 | 14.0 | 1300 | 1530 | 2000 | 2500 | 3000 | 3500 | 4000 | 4700 | 4700 | 5400 | 5400 | 6000 | 6000 |
| | 47.08 | 12.5 | 1300 | 1600 | 2000 | 2500 | 3000 | 3500 | 4000 | 3860 | 4700 | 5400 | 5400 | 6000 | 6000 |
| | 52.11 | 11.0 | 1300 | 1600 | 2000 | 2500 | 3000 | 3500 | 4000 | 3860 | 3860 | 5400 | 5400 | 6000 | 6000 |
| | 57.66 | 10.0 | 1300 | 1600 | 2000 | 2500 | 3000 | 3500 | 4000 | 4700 | 3860 | 5400 | 5400 | 6000 | 6000 |
| | 63.82 | 9.1 | 1300 | 1600 | 2000 | 2500 | 3000 | 3500 | 4000 | 4700 | 4700 | 5400 | 5400 | 6000 | 6000 |

* For loads applied one shaft diameter from seal cage and speeds of 1170 rpm or lower. In each High Speed Shaft rpm section, the last overhung load value applies to all of the higher ratios of that gear reduction. Published ratings are based on a combination of the most unfavorable conditions of loading. Consult Factory for ratings of drives with fans.

© Rexnord Industries,LLC, 1998, 2009.

## Type AB
# Low Speed Shaft Overhung Load — Pounds ★

Multiply values listed below by 1000

| Approx. Low Speed Shaft rpm | DOUBLE, TRIPLE & QUADRUPLE REDUCTIONS — DRIVE SIZE | | | | | | | | | | |
|---|---|---|---|---|---|---|---|---|---|---|---|
| | 385 | 405 | 425 | 445 | 465 | 485 | 505 | 525 | 545 | 565 | 585 |
| 350 | 12.5 | 15.0 | 17.3 | 22.8 | 23.4 | | | | | | |
| 310 | 12.5 | 15.0 | 17.5 | 23.4 | 23.2 | | | | | | |
| 280 | 12.5 | 15.0 | 17.8 | 24.1 | 22.2 | | | | | | |
| 255 | 12.5 | 15.0 | 17.9 | 25.0 | 24.2 | | | | | | |
| 230 | 12.5 | 15.0 | 18.0 | 25.0 | 23.6 | 40.0 | 42.6 | 60.0 | | | |
| 210 | 12.5 | 15.0 | 18.0 | 25.0 | 25.3 | 38.4 | 48.9 | 60.0 | | | |
| 190 | 12.5 | 15.0 | 18.0 | 25.0 | 25.1 | 39.6 | 45.9 | 60.0 | | | |
| 170 | 12.5 | 15.0 | 18.0 | 25.0 | 26.9 | 38.2 | 44.9 | 60.0 | | | |
| 155 | 12.5 | 15.0 | 18.0 | 25.0 | 27.4 | 40.0 | 49.4 | 60.0 | | | |
| 140 | 12.5 | 15.0 | 18.0 | 25.0 | 28.6 | 40.0 | 50.0 | 60.0 | | | |
| 125 | 12.5 | 15.0 | 18.0 | 25.0 | 29.1 | 40.0 | 50.0 | 60.0 | 72.0 | | |
| 110 | 12.5 | 15.0 | 18.0 | 25.0 | 30.1 | 40.0 | 50.0 | 60.0 | 72.0 | | |
| 100 | 12.5 | 15.0 | 18.0 | 25.0 | 32.8 | 40.0 | 50.0 | 60.0 | 72.0 | 86.0 | 100 |
| 93 | 12.5 | 15.0 | 18.0 | 25.0 | 33.0 | 40.0 | 50.0 | 60.0 | 72.0 | 86.0 | 100 |
| 84 | 12.5 | 15.0 | 18.0 | 25.0 | 33.0 | 40.0 | 42.8 | 60.0 | 72.0 | 86.0 | 100 |
| 77 | 12.5 | 15.0 | 18.0 | 25.0 | 33.0 | 40.0 | 49.9 | 60.0 | 72.0 | 86.0 | 100 |
| 70 | 12.5 | 15.0 | 18.0 | 25.0 | 33.0 | 40.0 | 45.4 | 60.0 | 72.0 | 86.0 | 100 |
| 62 or Lower | 12.5 | 15.0 | 18.0 | 25.0 | 33.0 | 40.0 | 50.0 | 60.0 | 72.0 | 86.0 | 100 |

★ Published ratings are for standard assemblies with shaft extensions as shown on Page 67 and are based on the most unfavorable conditions of loading.

## Type ABXU — Shaft Up
# Low Speed Shaft Overhung Load — Pounds •

Multiply values by 1000

| Approx. Low Speed Shaft rpm | TRIPLE & QUADRUPLE REDUCTION — DRIVE SIZE | | | | | | | |
|---|---|---|---|---|---|---|---|---|
| | 405 | 425 | 445 | 465 | 485 | 505 | 535 | 555 |
| 125 | 15.0 | 16.3 | 22.4 | 29.6 | 38.3 | 45.7 | 60.0 | |
| 110 | 15.0 | 16.1 | 22.3 | 29.9 | 38.4 | 47.6 | 60.0 | 72.0 |
| 100 | 15.0 | 15.1 | 21.6 | 29.2 | 37.3 | 42.5 | 60.0 | 72.0 |
| 93 | 15.0 | 17.1 | 21.3 | 29.4 | 37.3 | 44.5 | 60.0 | 72.0 |
| 84 | 15.0 | 16.7 | 21.9 | 29.3 | 35.7 | 41.7 | 60.0 | 72.0 |
| 77 | 15.0 | 16.5 | 21.7 | 30.6 | 35.3 | 41.2 | 60.0 | 72.0 |
| 70 | 15.0 | 17.4 | 22.6 | 31.1 | 36.5 | 44.2 | 60.0 | 72.0 |
| 62 | 15.0 | 18.0 | 23.0 | 32.5 | 36.4 | 46.3 | 60.0 | 72.0 |
| 57 | 15.0 | 18.0 | 24.1 | 33.0 | 38.3 | 49.1 | 60.0 | 72.0 |
| 50 or Lower | 15.0 | 18.0 | 25.0 | 33.0 | 40.0 | 50.0 | 60.0 | 72.0 |

(See footnote to the right.)

## Type ABXD — Shaft Down
# Low Speed Shaft Overhung Load — Pounds •

Multiply values by 1000

| Approx. Low Speed Shaft rpm | TRIPLE & QUADRUPLE REDUCTION — DRIVE SIZE | | | | | | | |
|---|---|---|---|---|---|---|---|---|
| | 405 | 425 | 445 | 465 | 485 | 505 | 535 | 555 |
| 125 | 15.0 | 18 | 25 | 33 | 40 | 50 | 60 | |
| 115 or Lower | 15.0 | 18 | 25 | 33 | 40 | 50 | 60 | 72 |

• Refer to Factory for higher overhung load capacities and capacities at unlisted speeds. Furnish complete application information. Published ratings are for standard assemblies with shaft extension as shown on Page 67 and are based on the most unfavorable conditions of loading. For higher ratings and ratings for the second shaft extension, refer full data to the Factory. Consult Factory for Type ABXQ.

## Type ABX — Shaft Up or Down
# Low Speed Shaft Thrust Capacity *

THRUST UP

Pounds — Multiply values listed by 1000

| Approx. Low Speed Shaft rpm | DRIVE SIZE | | | | | | | |
|---|---|---|---|---|---|---|---|---|
| | 405 | 425 | 445 | 465 | 485 | 505 | 535 | 555 |
| 125 | 11.5 | 16.5 | 21.0 | 25.0 | 30.0 | 40.0 | 50.0 | |
| 110 | 11.5 | 16.5 | 20.7 | 25.0 | 38.4 | 40.0 | 50.0 | 60.0 |
| 100 | 11.5 | 16.5 | 20.3 | 25.0 | 37.3 | 39.5 | 50.0 | 60.0 |
| 93 | 11.5 | 16.5 | 19.6 | 25.0 | 37.3 | 40.0 | 50.0 | 60.0 |
| 84 | 11.5 | 16.5 | 19.5 | 25.0 | 35.7 | 38.2 | 50.0 | 60.0 |
| 77 | 11.5 | 16.5 | 19.9 | 25.0 | 35.3 | 40.0 | 50.0 | 60.0 |
| 70 | 11.5 | 16.5 | 20.7 | 25.0 | 36.5 | 40.0 | 50.0 | 60.0 |
| 62 | 11.5 | 16.5 | 21.0 | 25.0 | 36.4 | 40.0 | 50.0 | 60.0 |
| 57 | 11.5 | 16.5 | 21.0 | 25.0 | 38.3 | 40.0 | 50.0 | 60.0 |
| 50 or Lower | 11.5 | 16.5 | 21.0 | 25.0 | 40.0 | 40.0 | 50.0 | 60.0 |

(See footnote to the right.)

## Type ABX — Shaft Up or Down
# Low Speed Shaft Thrust Capacity *

THRUST DOWN

Pounds — Multiply values listed by 1000

| Approx. Low Speed Shaft rpm | DRIVE SIZE | | | | | | | |
|---|---|---|---|---|---|---|---|---|
| | 405 | 425 | 445 | 465 | 485 | 505 | 535 | 555 |
| 125 | 11.5 | 16.5 | 20.7 | 25.0 | 30.0 | 40.0 | 50.0 | |
| 110 | 11.5 | 16.5 | 20.2 | 25.0 | 30.0 | 40.0 | 50.0 | 60.0 |
| 100 | 11.5 | 16.5 | 19.8 | 25.0 | 30.0 | 38.4 | 50.0 | 60.0 |
| 93 | 11.5 | 16.5 | 19.1 | 25.0 | 30.0 | 40.0 | 50.0 | 60.0 |
| 84 | 11.5 | 16.5 | 19.0 | 25.0 | 30.0 | 37.1 | 50.0 | 60.0 |
| 77 | 11.5 | 16.5 | 19.3 | 25.0 | 30.0 | 40.0 | 50.0 | 60.0 |
| 70 | 11.5 | 16.5 | 20.1 | 25.0 | 30.0 | 39.4 | 50.0 | 60.0 |
| 62 | 11.5 | 16.5 | 20.5 | 25.0 | 30.0 | 40.0 | 50.0 | 60.0 |
| 57 or Lower | 11.5 | 16.5 | 21.0 | 25.0 | 30.0 | 40.0 | 50.0 | 60.0 |

* Published ratings are based on a combination of the most unfavorable conditions of loading. For higher ratings, refer full data to the Factory. Consult the Factory for combined radial and thrust loads. Consult Factory for Type ABXQ.


© Rexnord Industries, LLC, 1998, 2009.

# Exact Ratios/Right Angle Shaft Gear Drives

### Double Reduction (Type AB)

| Nominal Ratio * | DRIVE SIZE | | | | | | | |
|---|---|---|---|---|---|---|---|---|
| | 385 | 405 | 425 | 445 | 465 | 485 | 505 | 525 |
| **5.06** | 4.850 * | 4.961 | 4.933 | 5.281 * | 4.902 | | | |
| **5.60** | 5.413 | 5.495 | 5.391 | 5.707 | 5.427 | | | |
| **6.20** | 6.089 | 6.201 | 6.216 | 6.188 | 6.262 | | | |
| **6.86** | 6.594 | 6.716 | 6.766 | 6.739 | 6.567 * | | | |
| **7.59** | 7.170 * | 7.345 | 7.400 | 7.812 | 7.104 * | 7.585 | 7.636 | 7.410 |
| **8.40** | 8.119 | 7.971 * | 8.143 | 8.500 | 8.298 | 8.162 | 8.213 | 8.208 |
| **9.30** | 9.134 | 8.996 | 9.388 | 9.218 | 9.575 | 9.400 | 9.545 | 9.262 |
| **10.29** | 9.890 | 10.66 | 10.22 | 10.04 | 10.04 | 10.23 | 10.45 | 10.03 |
| **11.39** | 10.76 * | 10.93 * | 11.18 | 11.64 | 10.86 * | 11.19 | 11.45 | 10.97 |
| **12.61** | 12.33 | 12.11 | 12.25 | 12.61 | 12.53 | 12.24 | 12.21 | 12.37 |
| **13.95** | 13.87 | 13.66 | 14.13 | 13.68 | 14.46 | 14.10 | 14.20 | 13.96 |
| **15.44** | 15.02 | 14.80 * | 15.38 | 14.90 | 15.16 | 15.35 | 15.54 | 15.12 |
| **17.09** | 16.34 * | 16.19 * | 16.82 | 17.27 | 16.40 * | 16.79 | 17.04 | 16.54 |

* Except where noted with an asterisk (*), exact ratios are within ±4% of the nominal ratios.

### Triple Reduction (Type AB, ABR & ABX)

| Nominal Ratio * | DRIVE SIZE | | | | | | | | | | | | |
|---|---|---|---|---|---|---|---|---|---|---|---|---|---|
| | 385 | 405 | 425 | 445 | 465 | 485 | 505 | 525 | 535 | 545 | 555 | 565 | 585 |
| **13.95** | . . . | 14.38 | 13.70 | 14.41 | 13.82 | 14.16 | 14.61 * | . . . | 14.65 * | 13.45 | . . . | 13.80 | 13.93 |
| **15.44** | . . . | 15.99 | 14.98 | 15.57 | 15.30 | 15.24 | 15.71 | . . . | 16.16 * | 14.64 | 14.83 | 15.26 | 15.15 |
| **17.09** | . . . | 17.71 | 17.27 | 16.83 | 16.43 | 16.72 | 18.11 * | . . . | 18.13 * | 16.54 | 16.40 | 17.49 | 16.42 |
| **18.91** | 18.80 | 18.60 | 18.45 | 18.19 | 18.19 | 17.99 * | 19.47 | 19.92 * | 19.94 * | 18.08 * | 18.53 | 18.99 | 17.89 |
| **20.93** | 21.15 | 21.65 | 21.28 | 21.48 | 20.99 | 20.72 | 21.22 | 21.57 | 22.37 * | 20.50 | 20.20 | 20.71 | 19.62 |
| **23.16** | 22.90 | 22.32 | 23.16 | 22.83 | 22.74 | 22.55 | 22.82 | 22.54 | 23.09 | 22.40 | 22.52 | 22.28 | 22.37 |
| **25.63** | 24.72 | 25.19 | 25.20 | 24.76 | 26.23 | 26.11 | 26.52 | 25.44 | 25.46 | 25.07 | 25.04 | 25.89 | 24.52 |
| **28.36** | 29.10 | 27.28 | 27.61 | 29.20 | 27.52 | 28.42 | 28.88 | 27.55 | 28.57 | 27.63 | 27.91 | 28.35 | 27.46 |
| **31.39** | 30.88 | 32.07 | 31.97 | 31.26 | 32.24 | 30.93 | 31.60 | 31.12 | 30.89 | 31.33 | 30.38 | 31.09 | 30.42 |
| **34.74** | 33.44 | 33.48 | 34.80 | 34.25 | 34.54 | 33.83 | 33.99 | 34.47 | 34.20 | 34.24 | 34.42 | 35.64 | 33.34 |
| **38.44** | 37.07 | 37.78 | 37.86 | 37.14 | 38.06 | 39.43 | 39.50 | 38.90 | 38.94 | 38.32 | 38.27 | 38.86 | 37.63 |
| **42.54** | 43.65 | 41.12 | 41.49 | 43.80 | 43.23 | 42.92 | 43.02 | 42.13 | 43.69 | 41.71 | 42.66 | 42.55 | 41.37 |
| **47.08** | 46.32 | 48.11 | 45.16 * | 46.89 | 46.77 | 46.71 | 47.10 | 46.98 | 47.24 | 47.00 | 46.43 | 46.24 | 45.39 |
| **52.11** | 50.16 | 52.62 | 52.86 | 50.77 | 50.10 | 51.09 | 50.44 | 52.04 | 51.64 | 51.36 | 51.63 | 53.00 | 50.27 |
| **57.66** | 59.83 | 58.66 | 57.52 | 56.42 | 57.81 | 59.33 | 58.62 | 58.72 | 58.78 | 57.48 | 57.41 | 57.80 | 56.73 |
| **63.82** | 65.06 | 66.19 | 63.03 | 61.45 | 65.67 | 64.58 | 63.84 | 61.59 | 65.95 | 62.57 | 63.99 | 63.28 | 62.38 |
| **70.62** | 69.03 | 71.69 | 68.60 | 71.22 | 71.04 | 70.29 | 69.90 | 72.16 | 71.31 | 70.02 | 69.65 | 70.46 | 67.56 |
| **78.16** | 74.75 * | | | | | | | | | | | | |

* Except where noted with an asterisk (*), exact ratios are within ±4% of the nominal ratios.

Triple reduction ratios in the screened areas are offered for Types ABR and ABX only.

### Quadruple Reduction (Type AB, ABR & ABX)

| Nominal Ratio * | DRIVE SIZE | | | | | | | | | | | | |
|---|---|---|---|---|---|---|---|---|---|---|---|---|---|
| | 385 | 405 | 425 | 445 | 465 | 485 | 505 | 525 | 535 | 545 | 555 | 565 | 585 |
| **70.62** | . . . | . . . | . . . | . . . | . . . | . . . | . . . | . . . | . . . | . . . | . . . | . . . | 71.70 |
| **78.16** | . . . | 81.14 | 74.03 * | 76.12 | 75.46 | 74.30 | 79.18 | 77.49 | 79.37 | 75.82 | 78.74 | 78.44 | 80.91 |
| **86.50** | 85.52 | 87.88 | 86.50 | 82.54 | 87.07 | 85.56 | 86.45 | 87.45 | 87.53 | 84.85 | 85.39 | 86.20 | 89.56 |
| **95.73** | 92.60 | 99.95 | 95.23 | 90.94 | 90.70 * | 93.13 | 94.15 | 97.64 | 100.0 | 94.68 | 97.58 | 94.01 | 98.47 |
| **105.9** | 108.5 | 108.3 | 103.6 | 107.4 | 104.7 | 107.4 | 108.1 | 110.2 | 110.3 | 106.0 | 105.8 | 105.1 | 109.6 |
| **117.2** | 117.5 | 118.4 | 111.0 * | 114.2 | 113.4 | 116.9 | 117.7 | 115.6 | 115.7 | 115.3 | 118.0 | 115.8 | 121.4 |
| **129.7** | 126.8 | 125.9 | 131.5 | 123.8 | 130.8 | 128.3 | 125.4 | 126.9 | 127.0 | 126.4 | 128.4 | 131.8 | 134.0 |
| **143.6** | 137.3 | 149.0 | 143.2 | 134.8 * | 137.8 | 139.7 | 136.6 | 141.6 | 145.1 | 141.0 | 145.3 | 144.8 | 148.3 |
| **158.9** | 158.5 | 161.3 | 153.7 | 156.0 | 159.0 | 161.1 | 156.8 | 159.8 | 160.0 | 157.8 | 157.6 | 160.7 | 163.1 |
| **175.9** | 171.6 | 176.5 | 168.4 | 170.2 | 172.2 | 175.4 | 170.7 | 181.3 | 181.5 | 171.8 | 175.7 | 175.2 | 179.5 |
| **194.6** | 189.0 | 187.7 | 193.4 | 184.5 * | 198.7 | 195.0 | 190.5 | 192.7 | 192.9 | 187.5 | 191.2 | 197.5 | 197.4 |
| **215.4** | 204.7 | 221.3 | 210.5 | 217.6 | 208.4 | 212.2 | 207.5 | 218.6 | 218.9 | 216.0 | 215.7 | 218.6 | 223.9 |
| **238.4** | 236.2 | 242.0 | 229.0 | 232.5 | 235.4 | 244.8 | 238.2 | 242.8 | 243.1 | 234.2 | 233.9 | 242.6 | 246.2 |
| **263.8** | 255.7 | 250.7 | 251.0 | 253.2 | 267.0 | 266.4 | 259.4 | 254.7 | 254.9 | 254.9 | 260.7 | 264.6 | 271.0 |
| **291.9** | 299.0 | 298.5 | 281.3 | 297.7 | 303.2 | 288.2 | 282.1 | 298.4 | 286.0 | 295.7 | 283.8 | 286.2 | 297.6 |
| **323.1** | 325.2 | 321.0 | 311.5 | 322.3 | 328.0 | 313.7 | 307.2 | 328.4 | 324.6 | 321.8 | 329.1 | 318.6 | 322.3 |
| **357.5** | . . . | 349.4 | 341.3 | 345.0 | 355.2 | 341.4 | 356.1 | 355.2 | 368.3 | 360.1 | 358.2 | 348.9 | 352.5 |

* Except where noted with an asterisk (*), exact ratios are within ±5% of the nominal ratios.

**AVAILABILITY OF TYPES AB / ABR / ABX TRIPLE AND QUADRUPLE REDUCTION**

| TYPE | 385 | 405 | 425 | 445 | 465 | 485 | 505 | 525 | 535 | 545 | 555 | 565 | 585 |
|---|---|---|---|---|---|---|---|---|---|---|---|---|---|
| **AB** | X | X | X | X | X | X | X | X | . . . | X | . . . | X | X |
| **ABR** | . . . | X | X | X | X | X | X | . . . | X | . . . | X | . . . | . . . |
| **ABX** | . . . | X | X | X | X | X | X | . . . | X | . . . | X | . . . | . . . |

© Rexnord Industries,LLC, 1998, 2009.

# Type AB Double Reduction

## Sizes 385-525/Dimensions — Inches

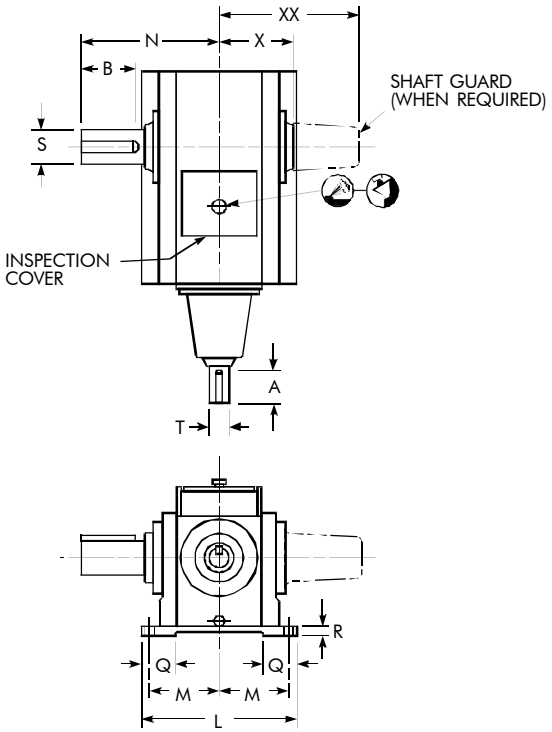


DRIVE WITH
COOLING FAN

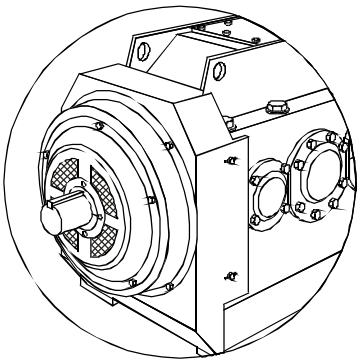

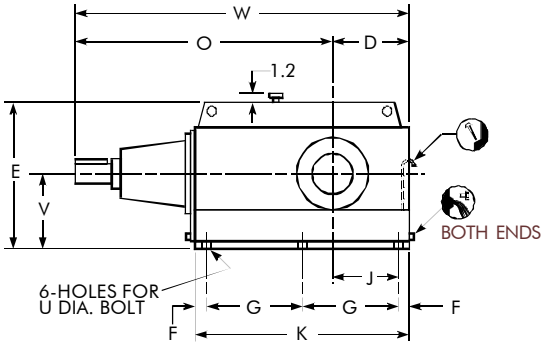


| DRIVE SIZE ★ | A W/O Fan | A With Fan | B | D | E | F | G | J | K | L | M | N | O | Q | R | Low Speed Shaft * S | Low Speed Shaft * Key |
|---|---|---|---|---|---|---|---|---|---|---|---|---|---|---|---|---|---|
| **385** | 5.00 | 3.06 | 7.88 | 10.06 | 20.06 | 1.62 | 12.50 | 8.44 | 28.24 | 23.76 | 10.50 | 19.10 | 34.60 | 5.00 | .94 | 4.500 | 1.000 x 1.000 x 6.500 |
| **405** | 5.50 | 3.26 | 8.66 | 11.20 | 23.00 | 2.00 | 14.00 | 9.20 | 32.00 | 25.30 | 11.25 | 20.60 | 38.50 | 5.50 | 1.06 | 5.000 | 1.250 x 1.250 x 7.500 |
| **425** | 7.00 | 4.12 | 10.06 | 12.74 | 25.00 | 1.62 | 15.75 | 11.12 | 34.74 | 27.50 | 12.25 | 22.90 | 44.60 | 6.00 | 1.06 | 5.750 | 1.500 x 1.500 x 8.000 |
| **445** | 7.50 | 4.38 | 11.38 | 14.50 | 27.70 | 2.50 | 17.50 | 12.00 | 40.00 | 32.20 | 14.60 | 26.30 | 51.18 | 7.00 | 1.20 | 6.500 | 1.500 x 1.500 x 10.000 |
| **465** | 7.50 | 4.38 | 12.68 | 16.50 | 31.00 | 2.50 | 20.50 | 14.00 | 46.00 | 33.00 | 15.00 | 28.60 | 54.82 | 7.00 | 1.26 | 7.250 | 1.750 x 1.500 x 11.000 |
| **485** | 9.00 | 5.56 | 14.88 | 19.00 | 35.00 | 2.50 | 22.25 | 16.00 | 49.50 | 35.00 | 15.40 | 30.70 | 62.40 | 9.00 | 1.50 | 8.500 | 2.000 x 1.500 x 13.000 |
| **505** | 10.00 | 6.32 | 16.18 | 20.50 | 38.00 | 2.75 | 24.00 | 17.25 | 53.50 | 39.50 | 17.25 | 33.60 | 67.10 | 10.26 | 1.75 | 9.250 | 2.500 x 1.750 x 14.000 |
| **525** | 11.24 | 7.32 | 18.38 | 22.50 | 41.00 | 2.50 | 27.25 | 20.00 | 59.50 | 42.00 | 18.50 | 37.20 | 71.32 | 10.50 | 2.10 | 10.500 | 2.500 x 1.750 x 16.000 |

| DRIVE SIZE ★ | Wt-lb | High Speed Shaft * T | High Speed Shaft * Key | U ♦ | V | W | X | XX ● |
|---|---|---|---|---|---|---|---|---|
| **385** | 1530 | 2.500 | .625 x .625 x 4.500 | 1.125 | 9.80 | 44.60 | 9.96 | 21.10 |
| **405** | 2020 | 2.750 | .625 x .625 x 5.000 | 1.125 | 11.12 | 49.70 | 10.56 | 21.58 |
| **425** | 2810 | 3.500 | .875 x .875 x 6.000 | 1.250 | 12.50 | 57.34 | 11.78 | 23.78 |
| **445** | 4320 | 3.750 | .875 x .875 x 6.500 | 1.500 | 14.50 | 65.68 | 13.78 | 27.18 |
| **465** | 5400 | 3.750 | .875 x .875 x 6.500 | 1.500 | 16.00 | 71.32 | 14.24 | 29.66 |
| **485** | 6990 | 4.500 | 1.000 x 1.000 x 8.000 | 2.000 | 18.00 | 81.40 | 14.36 | 31.24 |
| **505** | 10300 | 5.000 | 1.250 x 1.250 x 9.000 | 2.250 | 19.75 | 87.60 | 15.90 | 34.60 |
| **525** | 12810 | 5.500 | 1.250 x 1.250 x 10.000 | 2.250 | 21.10 | 93.82 | 17.56 | 38.12 |

★ Drives are for horizontal floor mounted operation unless specifically stated otherwise. Consult Factory for other mountings.
Dimensions are for reference only and are subject to change without notice unless certified.
♦ Use Grade 5 fasteners for diameters through 1.50". For larger diameter fasteners, use ASTM A-354 Grade BC.
● Single low speed shaft extension is standard; double extension, as indicated with dimension XX, is an extra charge option.
✱ Shaft diameters under 3" are held to limits of +.0000", –.0005". Shaft diameters 3" and over are held to limits of +.000", –.001". Shaft keyseat depth is one-half of key height.


© Rexnord Industries, LLC, 1998, 2009.

# Type AB Triple Reduction
## Sizes 385-585/Dimensions — Inches

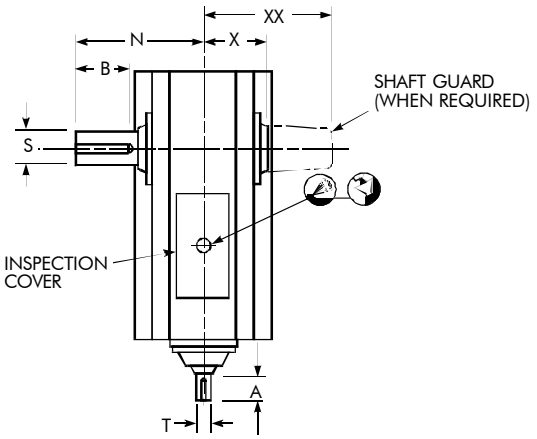


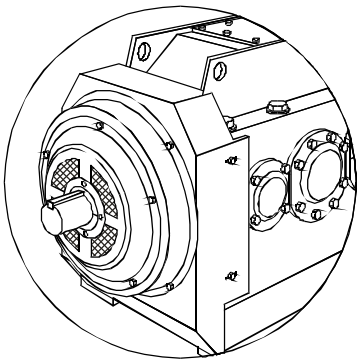


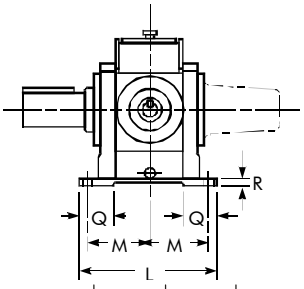


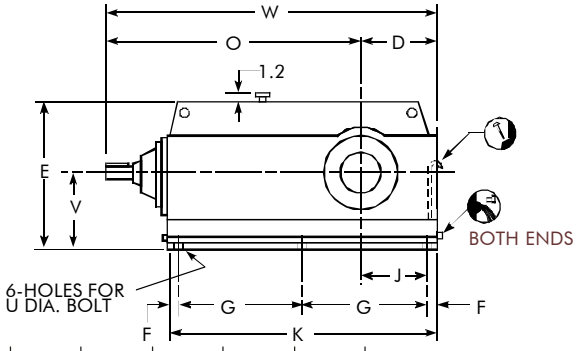


| DRIVE SIZE ★ | A W/O Fan | A With Fan | B | D | E | F | G | J | K | L | M | N | O | Q | R | Low Speed Shaft * S | Low Speed Shaft * Key |
|---|---|---|---|---|---|---|---|---|---|---|---|---|---|---|---|---|---|
| **385** | 3.50 | 1.88 | 7.88 | 10.24 | 18.96 | 1.80 | 16.50 | 8.44 | 36.60 | 21.00 | 9.10 | 17.80 | 34.92 | 5.00 | .94 | 4.500 | 1.000 x 1.000 x 6.500 |
| **405** | 3.50 | 1.88 | 8.66 | 11.20 | 21.32 | 2.00 | 18.40 | 9.20 | 40.80 | 22.80 | 10.00 | 19.40 | 37.10 | 5.50 | 1.06 | 5.000 | 1.250 x 1.250 x 7.500 |
| **425** | 4.50 | 2.56 | 10.06 | 12.74 | 24.00 | 2.75 | 20.00 | 10.00 | 45.50 | 24.80 | 11.00 | 21.60 | 43.71 | 6.00 | 1.06 | 5.750 | 1.500 x 1.500 x 8.000 |
| **445** | 5.00 | 2.76 | 11.38 | 14.50 | 27.70 | 2.50 | 23.25 | 12.00 | 51.50 | 27.40 | 12.20 | 23.90 | 48.60 | 7.00 | 1.20 | 6.500 | 1.500 x 1.500 x 10.000 |
| **465** | 5.50 | 2.88 | 12.68 | 16.50 | 31.00 | 2.50 | 26.50 | 14.00 | 58.00 | 29.00 | 13.00 | 26.60 | 54.50 | 7.00 | 1.26 | 7.250 | 1.750 x 1.500 x 11.000 |
| **485** | 7.00 | 4.12 | 14.88 | 19.00 | 35.00 | 3.50 † | 30.00 † | 15.00 | 58.50 | 33.00 | 14.40 | 30.70 | 62.60 | 8.00 | 1.50 | 8.500 | 2.000 x 1.500 x 13.000 |
| **505** | 7.50 | 4.38 | 16.18 | 20.50 | 38.00 | 2.50 | 34.50 † | 17.50 | 65.00 | 37.00 | 16.00 | 33.60 | 70.70 | 8.80 | 1.75 | 9.250 | 2.500 x 1.750 x 14.000 |
| **525** | 7.50 | 4.38 | 18.38 | 22.50 | 41.00 | 3.00 | 35.50 † | 19.50 | 71.00 | 39.00 | 17.00 | 37.20 | 75.80 | 9.00 | 2.10 | 10.500 | 2.500 x 1.750 x 16.000 |
| **545** | 9.00 | . . . | 20.12 | 24.50 | 45.00 | 3.00 | 36.75 | 21.50 | 79.50 | 44.00 | 19.50 | 41.90 | 85.40 | 9.15 | 2.10 | 11.500 | 3.000 x 2.000 x 17.000 |
| **565** | 10.00 | . . . | 21.44 | 25.50 | 48.00 | 3.00 | 39.50 | 22.50 | 85.00 | 52.00 | 23.20 | 45.40 | 92.10 | 11.50 | 2.35 | 12.250 | 3.000 x 2.000 x 19.000 |
| **585** | 11.24 | . . . | 22.76 | 29.00 | 54.60 | 3.00 | 44.50 | 26.00 | 95.00 | 56.40 | 25.40 | 49.80 | 99.30 | 11.50 | 2.35 | 13.000 | 3.000 x 2.000 x 21.000 |

| DRIVE SIZE ★ | Wt-lb | High Speed Shaft * T | High Speed Shaft * Key | U ♦ | V | W | X | XX ● |
|---|---|---|---|---|---|---|---|---|
| **385** | 1600 | 1.750 | .375 x .375 x 3.000 | 1.125 | 9.80 | 45.16 | 8.60 | 19.75 |
| **405** | 1960 | 1.750 | .375 x .375 x 3.000 | 1.125 | 11.12 | 48.30 | 9.32 | 20.34 |
| **425** | 2860 | 2.250 | .500 x .500 x 4.000 | 1.250 | 12.50 | 56.45 | 10.54 | 22.54 |
| **445** | 4380 | 2.500 | .625 x .625 x 4.500 | 1.500 | 14.50 | 63.10 | 11.38 | 24.78 |
| **465** | 5380 | 2.750 | .625 x .625 x 5.000 | 1.500 | 16.00 | 71.00 | 12.24 | 27.64 |
| **485** | 7450 | 3.500 | .875 x .875 x 6.000 | 2.000 | 18.00 | 81.60 | 14.36 | 31.24 |
| **505** | 9900 | 3.750 | .875 x .875 x 6.500 | 2.250 | 19.75 | 91.20 | 15.90 | 34.46 |
| **525** | 12900 | 3.750 | .875 x .875 x 6.500 | 2.250 | 21.10 | 98.30 | 17.56 | 38.12 |
| **545** | 18700 | 4.500 | 1.000 x 1.000 x 8.000 | 2.250 | 23.00 | 109.90 | 20.10 | 43.00 |
| **565** | 26050 | 5.000 | 1.250 x 1.250 x 9.000 | 2.500 | 25.00 | 117.60 | 22.25 | 46.10 |
| **585** | 33400 | 5.500 | 1.250 x 1.250 x 10.000 | 2.500 | 28.00 | 128.30 | 25.28 | 50.90 |

★ Drives are for horizontal floor mounted operation unless specifically stated otherwise. Consult Factory for other mountings.
Dimensions are for reference only and are subject to change without notice unless certified.
† Size 485: high speed end of drive Dimension G = 22.50", F = 2.50"
Size 505: high speed end of drive Dimension G = 25.50"
Size 525: high speed end of drive Dimension G = 29.50".
♦ Use Grade 5 fasteners for diameters through 1.50". For larger diameter fasteners, use ASTM A-354 Grade BC.
● Single low speed shaft extension is standard; double extension, as indicated with dimension XX, is an extra charge option.
✱ Shaft diameters under 3" are held to limits of +.0000", –.0005". Shaft diameters 3" and over are held to limits of +.000", –.001". Shaft keyseat depth is one-half of key height.

© Rexnord Industries,LLC, 1998, 2009.

# Type AB Quadruple Reduction

## Sizes 385-585/Dimensions — Inches

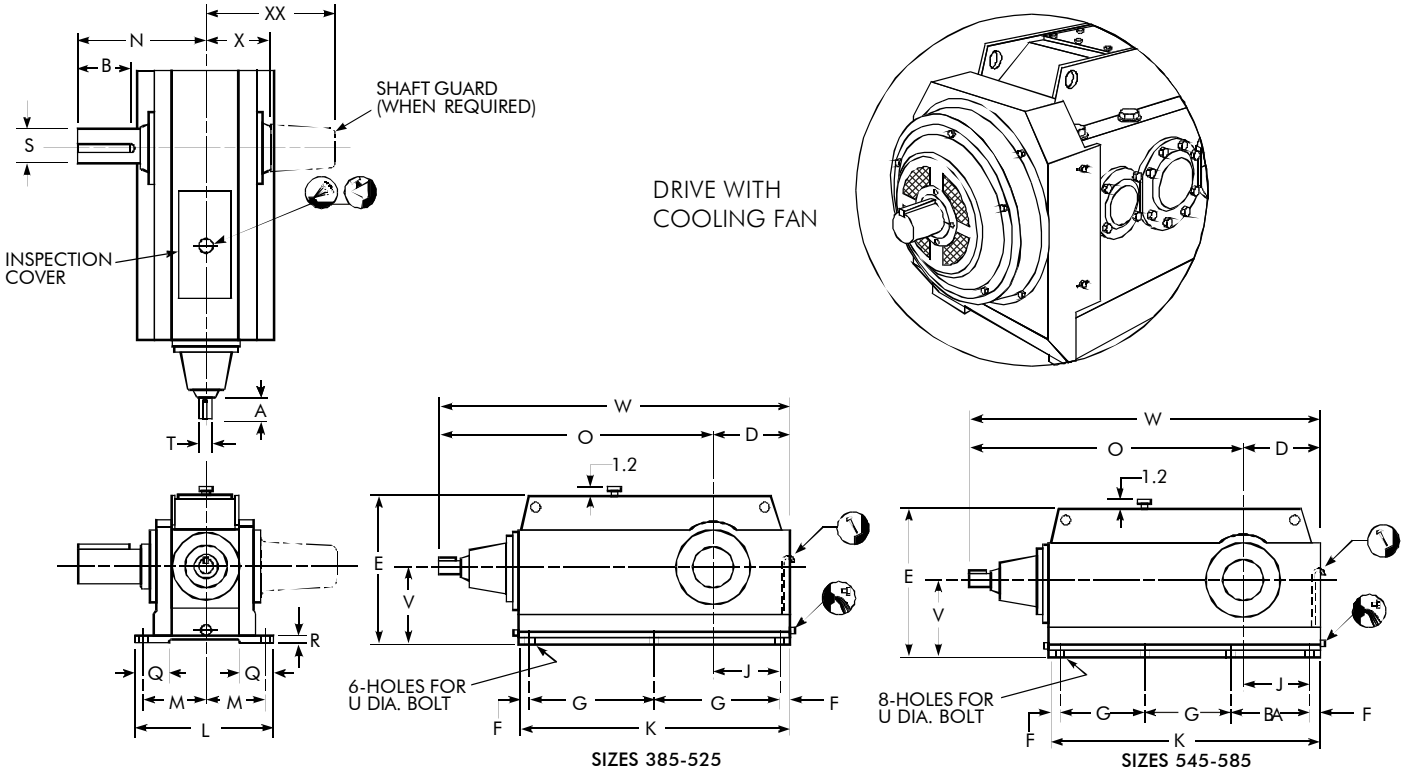


| DRIVE SIZE ★ | A W/O Fan | A With Fan | B | D | E | F | G | J | K | L | M | N | O | Q | R | Low Speed Shaft * S | Low Speed Shaft * Key |
|---|---|---|---|---|---|---|---|---|---|---|---|---|---|---|---|---|---|
| **385** | 3.00 | . . . | 7.88 | 10.24 | 18.96 | 1.80 | 16.50 | 8.44 | 36.60 | 21.00 | 9.10 | 17.80 | 37.20 | 5.00 | .94 | 4.500 | 1.000 x 1.000 x 6.500 |
| **405** | 3.00 | . . . | 8.66 | 11.20 | 21.32 | 2.00 | 18.40 | 9.20 | 40.80 | 22.80 | 10.00 | 19.40 | 39.60 | 5.50 | 1.06 | 5.000 | 1.250 x 1.250 x 7.500 |
| **425** | 3.50 | 1.88 | 10.06 | 12.74 | 24.00 | 2.75 | 20.00 | 10.00 | 45.50 | 24.80 | 11.00 | 21.60 | 45.80 | 6.00 | 1.06 | 5.750 | 1.500 x 1.500 x 8.000 |
| **445** | 3.50 | 1.88 | 11.38 | 14.50 | 27.70 | 2.50 | 23.25 | 12.00 | 51.50 | 27.40 | 12.20 | 23.90 | 49.89 | 7.00 | 1.20 | 6.500 | 1.500 x 1.500 x 10.000 |
| **465** | 4.50 | 2.56 | 12.68 | 16.50 | 31.00 | 2.50 | 26.50 | 14.00 | 58.00 | 29.00 | 13.00 | 26.60 | 58.20 | 7.00 | 1.26 | 7.250 | 1.750 x 1.500 x 11.000 |
| **485** | 5.00 | 2.76 | 14.88 | 19.00 | 35.00 | 3.50 † | 30.00 | 15.00 | 66.00 | 33.00 | 14.40 | 30.70 | 64.60 | 8.00 | 1.50 | 8.500 | 2.000 x 1.500 x 13.000 |
| **505** | 5.50 | 2.88 | 16.18 | 20.50 | 38.00 | 2.50 † | 34.50 | 17.50 | 74.30 | 37.00 | 16.00 | 33.60 | 72.00 | 8.80 | 1.75 | 9.250 | 2.500 x 1.750 x 14.000 |
| **525** | 5.50 | 2.88 | 18.38 | 22.50 | 41.00 | 3.00 | 37.25 | 19.50 | 80.50 | 39.00 | 17.00 | 37.20 | 77.00 | 9.00 | 2.10 | 10.500 | 2.500 x 1.750 x 16.000 |
| **545** | 7.50 | . . . | 20.12 | 24.50 | 45.00 | 3.00 † | 23.50 | 21.50 | 91.00 | 44.00 | 19.50 | 41.90 | 92.21 | 9.15 | 2.10 | 11.500 | 3.000 x 2.000 x 17.000 |
| **565** | 7.50 | . . . | 21.44 | 25.50 | 48.00 | 3.00 | 26.50 | 22.50 | 99.50 | 52.00 | 23.20 | 45.40 | 99.31 | 11.50 | 2.35 | 12.250 | 3.000 x 2.000 x 19.000 |
| **585** | 7.50 | . . . | 22.76 | 29.00 | 54.60 | 3.00 | 28.00 | 26.00 | 108.00 | 56.40 | 25.40 | 49.80 | 103.81 | 11.50 | 2.35 | 13.000 | 3.000 x 2.000 x 21.000 |

| DRIVE SIZE ★ | Wt-lb | High Speed Shaft * T | High Speed Shaft * Key | BA | U ♦ | V | W | X | XX ● |
|---|---|---|---|---|---|---|---|---|---|
| **385** | 1580 | 1.500 | .375 x .375 x 2.500 | . . . | 1.125 | 9.80 | 47.44 | 8.60 | 19.75 |
| **405** | 1960 | 1.500 | .375 x .375 x 2.500 | . . . | 1.125 | 11.12 | 50.80 | 9.32 | 20.34 |
| **425** | 2870 | 1.750 | .375 x .375 x 3.000 | . . . | 1.250 | 12.50 | 58.54 | 10.54 | 22.54 |
| **445** | 4430 | 1.750 | .375 x .375 x 3.000 | . . . | 1.500 | 14.50 | 64.39 | 11.38 | 24.78 |
| **465** | 5410 | 2.250 | .500 x .500 x 4.000 | . . . | 1.500 | 16.00 | 74.70 | 12.24 | 27.64 |
| **485** | 7870 | 2.500 | .625 x .625 x 4.500 | . . . | 2.000 | 18.00 | 83.60 | 14.36 | 31.24 |
| **505** | 10560 | 2.750 | .625 x .625 x 5.000 | . . . | 2.250 | 19.75 | 92.50 | 15.90 | 34.46 |
| **525** | 13600 | 2.750 | .625 x .625 x 5.000 | . . . | 2.250 | 21.10 | 99.50 | 17.56 | 38.12 |
| **545** | 20600 | 3.750 | .875 x .875 x 6.500 | 36.50 | 2.250 | 23.00 | 116.71 | 20.10 | 43.00 |
| **565** | 27600 | 3.750 | .875 x .875 x 6.500 | 40.50 | 2.500 | 25.00 | 124.81 | 22.25 | 46.10 |
| **585** | 35100 | 3.750 | .875 x .875 x 6.500 | 46.00 | 2.500 | 28.00 | 132.81 | 25.28 | 50.90 |

★ Drives are for horizontal floor mounted operation unless specifically stated otherwise. Consult Factory for other mountings.
Dimensions are for reference only and are subject to change without notice unless certified.

† Size 485: high speed end of drive Dimension F = 2.50″
Size 505: high speed end of drive Dimension F = 2.80″.
Size 545: high speed end of drive Dimension F = 4.50″.

♦ Use Grade 5 fasteners for diameters through 1.50″. For larger diameter fasteners, use ASTM A-354 Grade BC.

● Single low speed shaft extension is standard; double extension, as indicated with dimension XX, is an extra charge option.

✱ Shaft diameters under 3″ are held to limits of +.0000″, –.0005″. Shaft diameters 3″ and over are held to limits of +.000″, –.001″. Shaft keyseat depth is one-half of key height.


© Rexnord Industries, LLC, 1998, 2009.

# Type ABR Triple Reduction

## Sizes 405-485/Dimensions — Inches

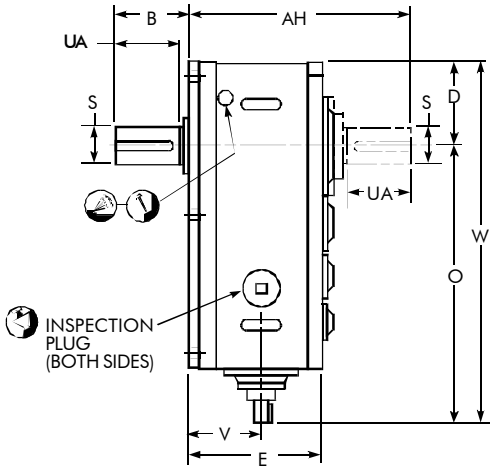


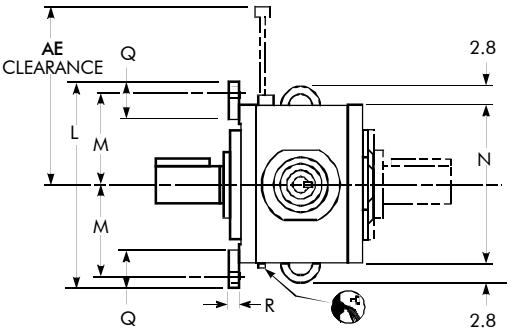


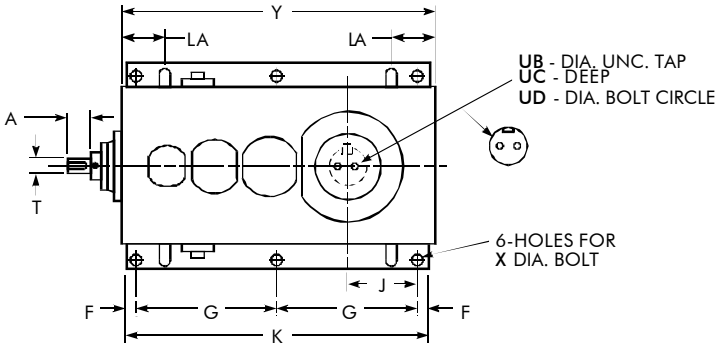


| DRIVE SIZE ★ | A | AE | AH | B | D | E | F | G | J | K | L | LA | M | N | O | Q | R |
|---|---|---|---|---|---|---|---|---|---|---|---|---|---|---|---|---|---|
| **405** | 3.50 | 25.4 | 29.10 | 9.70 | 11.31 | 17.65 | 1.50 | 18.50 | 9.20 | 40.00 | 27.75 | 5.7 | 12.50 | 21.62 | 37.10 | 5.00 | 1.50 |
| **425** | 4.50 | 28.2 | 32.20 | 11.00 | 12.31 | 19.45 | 1.50 | 21.00 | 10.25 | 45.00 | 31.80 | 6.6 ‡ | 14.50 | 24.62 | 43.71 | 6.00 | 1.60 |
| **445** | 5.00 | 32.9 | 35.60 | 12.20 | 14.62 | 21.41 | 1.75 | 24.00 | 12.25 | 51.50 | 37.00 | 6.7 | 16.75 | 29.25 | 48.60 | 7.00 | 1.81 |
| **465** | 5.50 | 37.4 | 39.20 | 14.00 | 16.62 | 23.16 | 1.95 † | 27.20 | 14.10 | 58.25 | 41.00 | 7.7 | 18.75 | 33.25 | 54.50 | 7.00 | 1.79 |
| **485** | 7.00 | 40.7 | 43.10 | 15.90 | 18.50 | 25.00 | 2.29 | 26.90 | 15.60 | 58.38 | 46.50 | 9.4 ‡ | 21.00 | 37.00 | 62.60 | 8.00 | 2.00 |

| DRIVE SIZE ★ | Low Speed Shaft * | | | | | | High Speed Shaft* | | V | W | X ♦ | Y | Wt-lb |
|---|---|---|---|---|---|---|---|---|---|---|---|---|---|
| | S | Key | UA | UB | UC | UD | T | Key | | | | | |
| **405** | 5.000 | 1.250 x 1.250 x 7.500 | 8.66 | .750 | 1.88 | 3.50 | 1.750 | .375 x .375 x 3.000 | 9.70 | 48.41 | 1.125 | 41.12 | 2310 |
| **425** | 5.750 | 1.500 x 1.500 x 8.000 | 10.06 | 1.125 | 2.25 | 3.50 | 2.250 | .500 x .500 x 4.000 | 10.60 | 56.02 | 1.250 | 46.01 | 3282 |
| **445** | 6.500 | 1.500 x 1.500 x 10.000 | 11.38 | 1.250 | 2.50 | 4.00 | 2.500 | .625 x .625 x 4.500 | 11.70 | 63.22 | 1.500 | 52.67 | 4576 |
| **465** | 7.250 | 1.750 x 1.500 x 11.000 | 12.68 | 1.250 | 2.50 | 4.75 | 2.750 | .625 x .625 x 5.000 | 12.60 | 71.12 | 1.500 | 59.43 | 6806 |
| **485** | 8.000 | 2.000 x 1.500 x 12.000 | 14.00 | 1.500 | 3.00 | 5.00 | 3.500 | .875 x .875 x 6.000 | 13.60 | 81.10 | 2.000 | 59.50 | 8576 |

★ Drives are for horizontal output shaft operation with a maximum momentary tilt of 2° unless specifically stated otherwise. Consult Factory for other mountings. Dimensions are for reference only and are subject to change without notice unless certified.

† Size 465: low speed end of drive Dimension F = 1.90".

‡ Size 425: low speed end of drive Dimension LA = 6.7"
Size 485: low speed end of drive Dimension LA = 9.5".

♦ Use Grade 5 fasteners for diameters through 1.50". For larger diameter fasteners, use ASTM A-354 Grade BC.

✱ Shaft diameters under 3" are held to limits of +.0000", –.0005". Shaft diameters 3" and over are held to limits of +.000", –.001". Shaft keyseat depth is one-half of key height.

© Rexnord Industries,LLC, 1998, 2009.

# Type ABR Triple Reduction

## Sizes 505-555/Dimensions — Inches

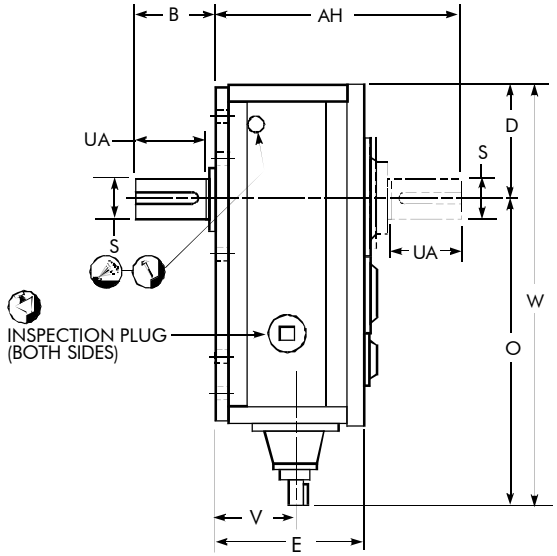


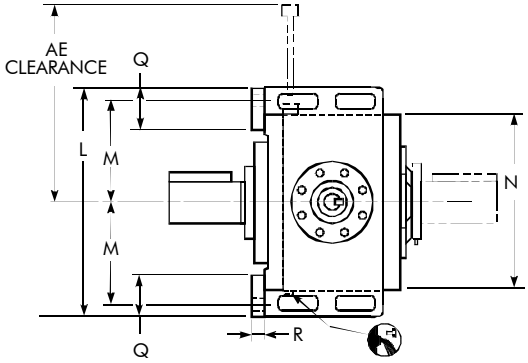


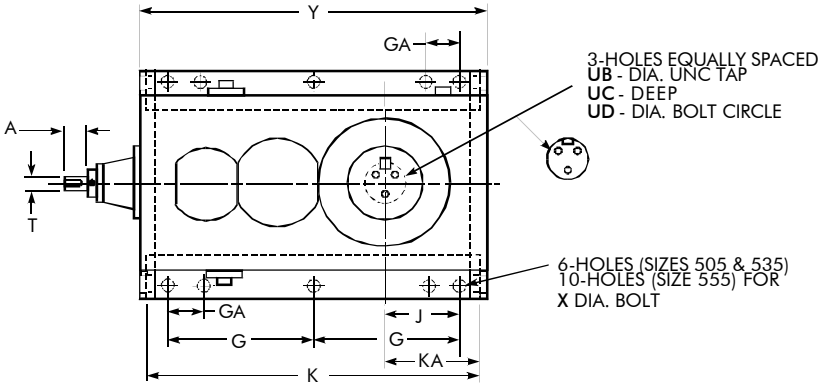


| DRIVE SIZE ★ | A | AE | AH | B | D | E | G | GA | J | K | KA | L | M | N |
|---|---|---|---|---|---|---|---|---|---|---|---|---|---|---|
| **505** ■ | 7.50 | 43.7 | 47.62 | 17.32 | 19.62 | 27.87 | 27.00 | . . . | 13.50 | 64.62 | 18.88 | 50.50 | 22.75 | 39.25 |
| **535** | 7.50 | 50.8 | 52.00 | 19.50 | 22.62 | 30.00 | 31.75 | . . . | 16.50 | 74.25 | 21.75 | 56.50 | 25.75 | 45.25 |
| **555** | 9.00 | 55.6 | 59.30 | 21.80 | 24.62 | 34.95 | 35.00 | 10.00 | 18.00 | 81.75 | 23.75 | 61.50 | 28.25 | 49.25 |

| DRIVE SIZE ★ | O | Q | R | Low Speed Shaft * | | | | | | High Speed Shaft * | | V | W | X ♦ | Y | Wt-lb |
|---|---|---|---|---|---|---|---|---|---|---|---|---|---|---|---|---|
| | | | | S | Key | UA | UB | UC | UD | T | Key | | | | | |
| **505** ■ | 70.71 | 10.50 | 2.25 | 9.250 | 2.500 x 1.750 x 14.00 | 16.18 | 1.500 | 3.00 | 6.00 | 3.750 | .875 x .875 x 6.50 | 15.16 | 90.33 | 2.250 | 65.83 | 12,250 |
| **535** | 77.80 | 10.50 | 2.25 | 10.500 | 2.500 x 1.750 x 16.00 | 18.38 | 1.500 | 3.00 | 7.50 | 3.750 | .875 x .875 x 6.50 | 16.25 | 100.42 | 2.250 | 75.92 | 16,650 |
| **555** | 87.40 | 12.00 | 2.31 | 11.500 | 3.000 x 2.000 x 17.00 | 20.12 | 1.750 | 3.50 | 8.00 | 4.500 | 1.000 x 1.000 x 8.50 | 18.75 | 112.02 | 2.250 | 83.32 | 23,100 |

★ Gear drives are for horizontal output shaft operation with a maximum momentary tilt of 2° unless specifically stated otherwise. Consult factory for other mountings. Dimensions are for reference only and are subject to change without notice unless certified.

♦ Use ASTM A-354 Grade BC fasteners.

✱ Shaft diameters are held to limits of +.000", –.001". Shaft keyseat depth is one-half of key height.

■ Add 1.00" to dimensions K, KA, D, W, & Y for size 505ABRJ drive.



© Rexnord Industries, LLC, 1998, 2009.

# Type ABR Quadruple Reduction

## Sizes 405-485/Dimensions — Inches

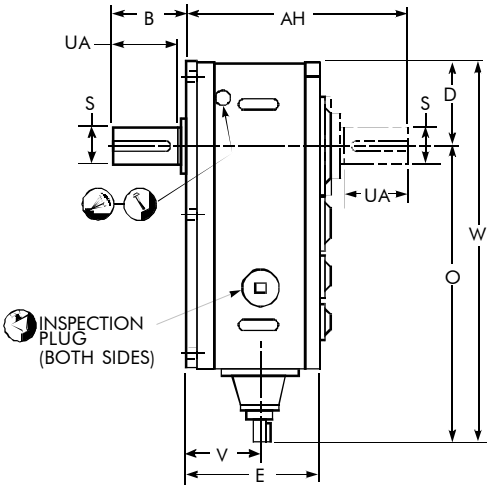


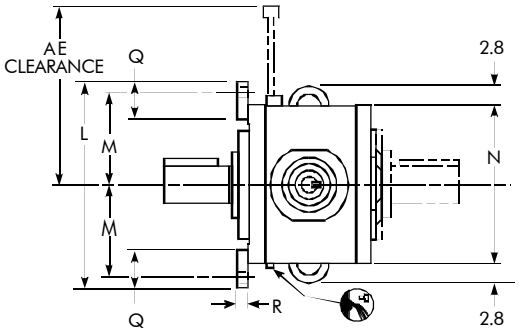


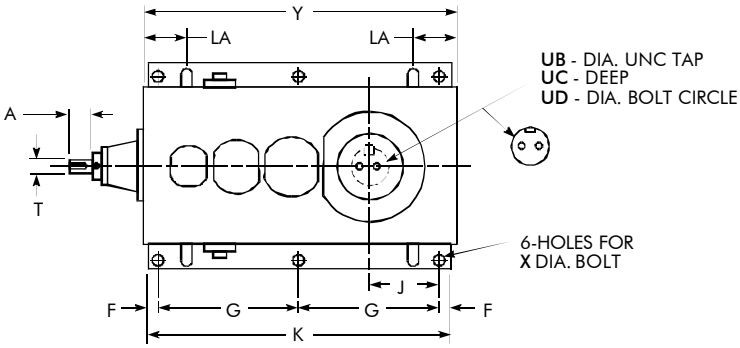


| DRIVE SIZE ★ | A | AE | AH | B | D | E | F | G | J | K | L | LA | M | N | O | Q | R |
|---|---|---|---|---|---|---|---|---|---|---|---|---|---|---|---|---|---|
| **405** | 3.00 | 25.4 | 29.10 | 9.70 | 11.31 | 17.65 | 1.50 | 18.50 | 9.20 | 40.00 | 27.75 | 5.7 | 12.50 | 21.62 | 39.60 | 5.00 | 1.50 |
| **425** | 3.50 | 28.2 | 32.20 | 11.00 | 12.31 | 19.45 | 1.50 | 21.00 | 10.25 | 45.00 | 31.80 | 6.6 ‡ | 14.50 | 24.62 | 45.80 | 6.00 | 1.60 |
| **445** | 3.50 | 32.9 | 35.60 | 12.20 | 14.62 | 21.41 | 1.75 | 24.00 | 12.25 | 51.50 | 37.00 | 6.7 | 16.75 | 29.25 | 49.89 | 7.00 | 1.81 |
| **465** | 4.50 | 37.4 | 39.20 | 14.00 | 16.62 | 23.16 | 1.95 † | 27.20 | 14.10 | 58.25 | 41.00 | 7.7 | 18.75 | 33.25 | 58.20 | 7.00 | 1.79 |
| **485** | 5.00 | 40.7 | 43.10 | 15.90 | 18.50 | 25.00 | 2.41 † | 30.60 | 15.60 | 56.90 | 46.50 | 9.4 ‡ | 21.00 | 37.00 | 64.60 | 8.00 | 2.00 |

| DRIVE SIZE ★ | Low Speed Shaft * | | | | | | High Speed Shaft * | | V | W | X ♦ | Y | Wt-lb |
|---|---|---|---|---|---|---|---|---|---|---|---|---|---|
| | S | Key | UA | UB | UC | UD | T | Key | | | | | |
| **405** | 5.000 | 1.250 x 1.250 x 7.500 | 8.66 | .750 | 1.88 | 3.50 | 1.500 | .375 x .375 x 2.500 | 9.70 | 50.91 | 1.125 | 41.12 | 2458 |
| **425** | 5.750 | 1.500 x 1.500 x 8.000 | 10.06 | 1.125 | 2.25 | 3.50 | 1.750 | .375 x .375 x 3.000 | 10.60 | 58.11 | 1.250 | 46.01 | 3286 |
| **445** | 6.500 | 1.500 x 1.500 x 10.000 | 11.38 | 1.250 | 2.50 | 4.00 | 1.750 | .375 x .375 x 3.000 | 11.70 | 64.51 | 1.500 | 52.67 | 4543 |
| **465** | 7.250 | 1.750 x 1.500 x 11.000 | 12.68 | 1.250 | 2.50 | 4.75 | 2.250 | .500 x .500 x 4.000 | 12.60 | 74.82 | 1.500 | 59.43 | 6863 |
| **485** | 8.000 | 2.000 x 1.500 x 12.000 | 14.00 | 1.500 | 3.00 | 5.00 | 2.500 | .625 x .625 x 4.500 | 13.60 | 83.10 | 2.000 | 67.04 | 9057 |

★ Drives are for horizontal output shaft operation with a maximum momentary tilt of 2° unless specifically stated otherwise. Consult Factory for other mountings. Dimensions are for reference only and are subject to change without notice unless certified.

† Size 465: low speed end of drive Dimension F = 1.90″
Size 485: low speed end of drive Dimension F = 2.29″.

‡ Size 425: low speed end of drive Dimension LA = 6.7″
Size 485: low speed end of drive Dimension LA = 9.5″.

♦ Use Grade 5 fasteners for diameters through 1.50″. For larger diameter fasteners, use ASTM A-354 Grade BC.

✱ Shaft diameters under 3″ are held to limits of +.0000″, –.0005″. Shaft diameters 3″ and over are held to limits of +.000″, –.001″. Shaftkeyseat depth is one-half of key height.

© Rexnord Industries,LLC, 1998, 2009.

# Type ABR Quadruple Reduction

## Sizes 505-555/Dimensions — Inches

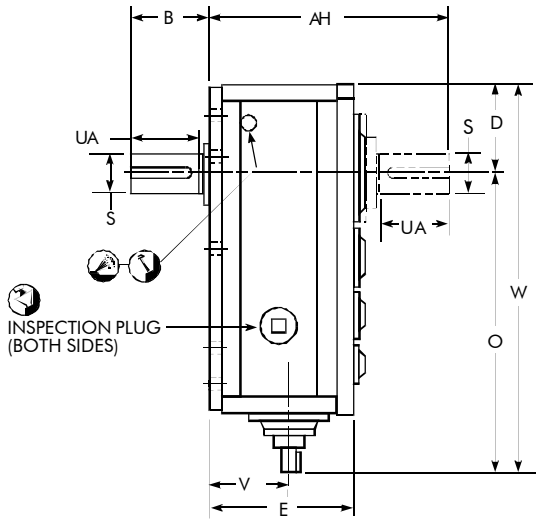


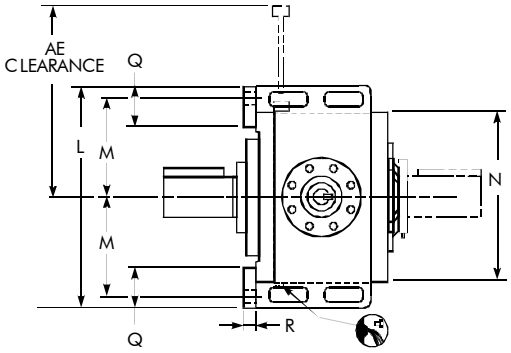


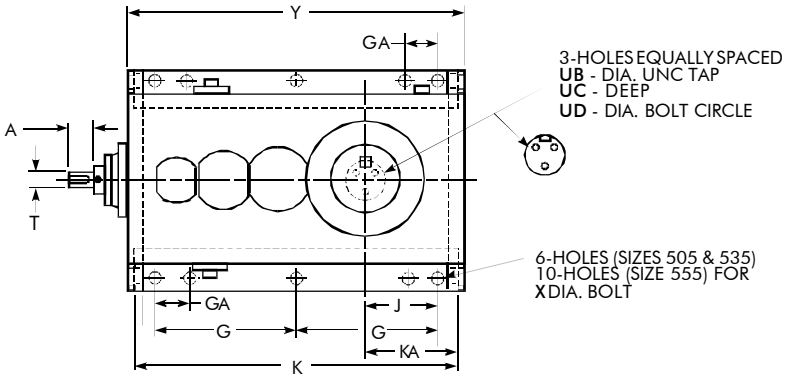


| DRIVE SIZE ★ | A | AE | AH | B | D | E | G | GA | J | K | KA | L | M | N |
|---|---|---|---|---|---|---|---|---|---|---|---|---|---|---|
| **505** ■ | 5.50 | 43.7 | 47.62 | 17.32 | 19.62 | 27.87 | 31.00 | . . . | 13.50 | 72.90 | 18.88 | 50.50 | 22.75 | 39.25 |
| **535** | 5.50 | 50.3 | 52.00 | 19.50 | 22.62 | 30.00 | 35.75 | . . . | 16.50 | 82.25 | 21.75 | 56.50 | 25.75 | 45.25 |
| **555** | 7.50 | 54.0 | 59.30 | 21.80 | 24.62 | 34.95 | 40.00 | 8.00 | 18.00 | 92.75 | 23.75 | 61.50 | 28.25 | 49.25 |

| DRIVE SIZE ★ | O | Q | R | Low Speed Shaft * | | | | | | High Speed Shaft * | | V | W | X ♦ | Y | Wt-lb |
|---|---|---|---|---|---|---|---|---|---|---|---|---|---|---|---|---|
| | | | | S | Key | UA | UB | UC | UD | T | Key | | | | | |
| **505** ■ | 72.02 | 10.50 | 2.25 | 9.250 | 2.500 x 1.750 x 14.00 | 16.18 | 1.500 | 3.00 | 6.00 | 2.750 | .625 x .625 x 5.00 | 15.16 | 91.64 | 2.250 | 74.28 | 13,050 |
| **535** | 79.02 | 10.50 | 2.25 | 10.500 | 2.500 x 1.750 x 16.00 | 18.38 | 1.500 | 3.00 | 7.50 | 2.750 | .625 x .625 x 5.00 | 16.25 | 101.64 | 2.250 | 84.28 | 18,300 |
| **555** | 94.21 | 12.00 | 2.31 | 11.500 | 3.000 x 2.000 x 17.00 | 20.12 | 1.750 | 3.50 | 8.00 | 3.750 | .875 x .875 x 6.50 | 18.75 | 118.83 | 2.250 | 94.32 | 24,250 |

★ Gear drives are for horizontal output shaft operation with a maximum momentary tilt of 2° unless specifically stated otherwise. Consult Factory for other mountings. Dimensions are for reference only and are subject to change without notice unless certified.

♦ Use ASTM A-354 Grade BC fasteners.

✱ Shaft diameters under 3" are held to limits of +.0000", –.0005". Shaft diameters 3" and over are held to limits of +.000", –.001". Shaft keyseat depth is one-half of key height.

■ Add 1.00" to dimensions K, KA, D, W, & Y for size 505ABRJ drive.



© Rexnord Industries, LLC, 1998, 2009.

# Type ABRJ — Hollow Low Speed Shaft – Shrink Disc Mounted

## Triple and Quadruple Reduction

## Sizes 405-555/Dimensions — Inches

Refer to Pages 89 thru 92 for basic drive dimensions. Refer to Page 113 for hollow low speed shaft and driven shaft recommendations and dimensions.

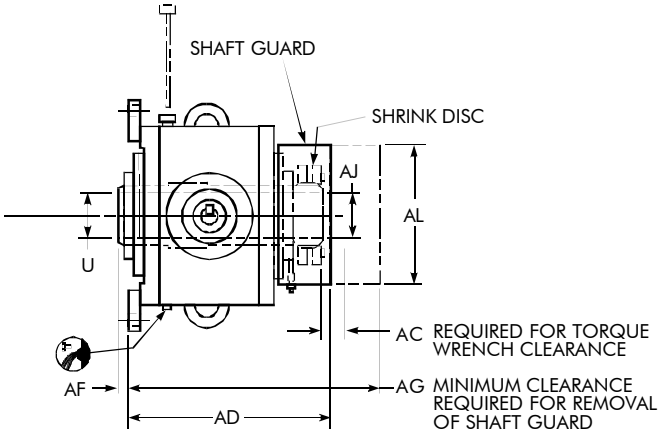


SIZES 405-485

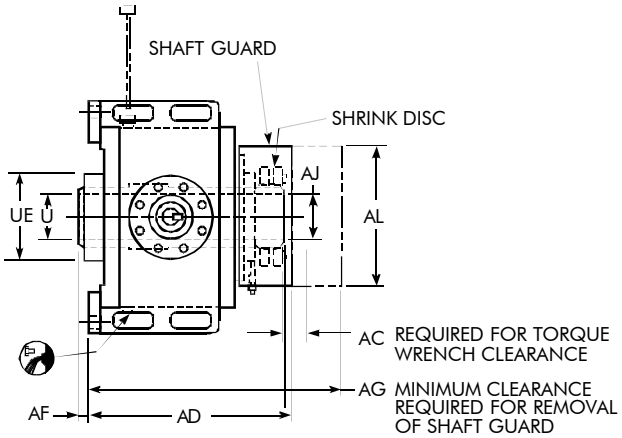


SIZES 505-555

| DRIVE SIZE ★ | AC | AD | AF | AG | AL | AJ ♣ | U +.002 –.000 | UE | Wt-lb Triple | Wt-lb Quadruple |
|---|---|---|---|---|---|---|---|---|---|---|
| **405** | 4.00 | 26.51 | 1.20 | 31.96 | 16.72 | 5.2505 | 5.500 | . . . | 2,310 | 2,455 |
| **425** | 4.00 | 29.91 | 1.70 | 37.95 | 17.96 | 6.0005 | 6.250 | . . . | 3,280 | 3,285 |
| **445** | 5.00 | 33.33 | 1.50 | 42.27 | 19.83 | 6.5005 | 6.750 | . . . | 4,575 | 4,540 |
| **465** | 5.00 | 35.60 | 1.50 | 45.16 | 21.33 | 7.2505 | 7.500 | . . . | 6,805 | 6,860 |
| **485** | 5.00 | 38.89 | 1.40 | 49.94 | 24.62 | 8.5005 | 8.750 | . . . | 8,575 | 9,055 |
| **505** | 5.00 | 42.55 | 4.17 | 56.1 | 24.33 | 9.7505 | 10.000 | 24.12 | 12,200 | 12,950 |
| **535** | 5.00 | 45.80 | 1.12 | 59.9 | 25.58 | 10.5005 | 10.750 | 24.12 | 16,450 | 18,150 |
| **555** | 5.50 | 52.00 | 2.20 | 67.0 | 27.58 | 11.4005 | 11.750 | 26.25 | 22,650 | 23,750 |

★ Dimensions are for reference only and are subject to change without notice unless certified.
♣ Sizes 405 thru 465, tolerance is +.0016, –.0000; Size 485 thru 555 tolerance is +.0020, –.0000.

© Rexnord Industries,LLC, 1998, 2009.

# Type ABX & ABXQ Triple Reduction

## Sizes 405-485/Dimensions — Inches

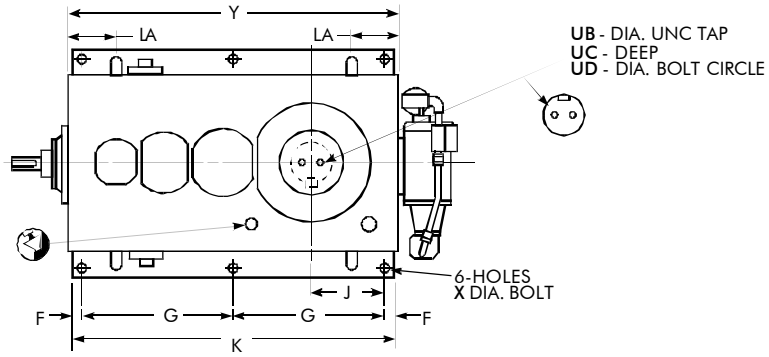


### Type ABXQ

Refer to Page 114 for dimensions of Hollow Low Speed Shaft with Keeper Plate.

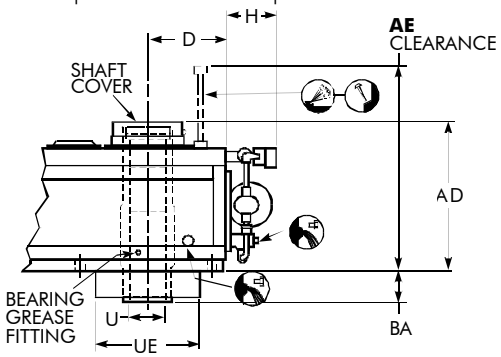


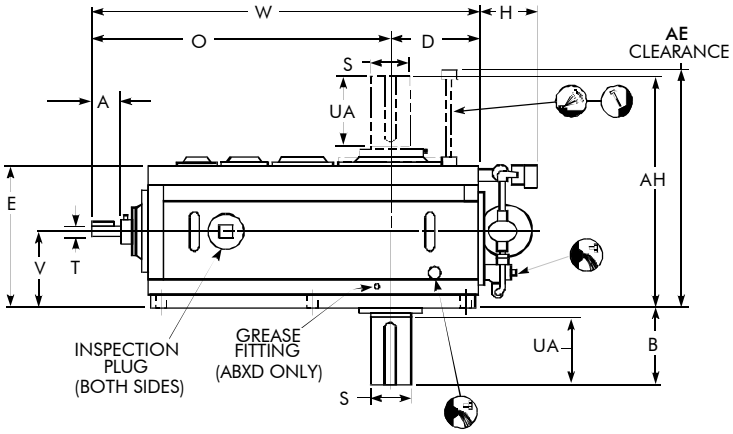


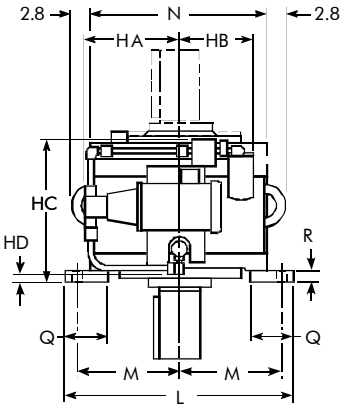


SIZES 425-485

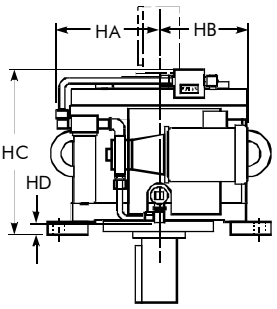


SIZE 405

| DRIVE SIZE ★ | A | AD | AE | AH | B | BA | D | E | F | G | Lubrication System H | HA | HB | HC | HD | J | K | L | LA | M | N | O | Q | R |
|---|---|---|---|---|---|---|---|---|---|---|---|---|---|---|---|---|---|---|---|---|---|---|---|---|
| **405** | 3.50 | 21.34 | 30.6 | 29.10 | 9.70 | 4.50 | 11.31 | 17.65 | 1.50 | 18.50 | 7.47 | 12.71 | 10.88 | 19.99 | 1.25 | 9.20 | 40.00 | 27.75 | 5.7 | 12.50 | 21.62 | 37.10 | 5.00 | 1.50 |
| **425** | 4.50 | 23.50 | 33.5 | 32.20 | 11.00 | 4.00 | 12.31 | 19.45 | 1.50 | 21.00 | 7.65 | 13.19 | 10.03 | 19.57 | 1.35 | 10.25 | 45.00 | 31.80 | 6.6 ‡ | 14.50 | 24.62 | 43.71 | 6.00 | 1.60 |
| **445** | 5.00 | 25.50 | 36.4 | 35.60 | 12.20 | 4.60 | 14.62 | 21.41 | 1.75 | 24.00 | 9.92 | 16.88 | 12.09 | 21.42 | 1.18 | 12.25 | 51.50 | 37.00 | 6.7 | 16.75 | 29.25 | 48.60 | 7.00 | 1.81 |
| **465** | 5.50 | 27.23 | 39.2 | 39.20 | 14.00 | 4.60 | 16.62 | 23.16 | 1.95 † | 27.20 | 9.92 | 18.88 | 13.34 | 23.20 | 1.42 | 14.10 | 58.25 | 41.00 | 7.7 | 18.75 | 33.25 | 54.50 | 7.00 | 1.79 |
| **485** | 7.00 | 29.18 | 41.9 | 43.10 | 15.90 | 5.40 | 18.50 | 25.00 | 2.29 | 26.90 | 9.92 | 18.88 | 15.09 | 24.97 | 1.87 | 15.60 | 58.38 | 46.50 | 9.4 ‡ | 21.00 | 37.00 | 62.60 | 8.00 | 2.00 |

| DRIVE SIZE ★ | Low Speed Shaft * S | Key | UA | UB | UC | UD | Keyed Hollow Low Speed Shaft U +.002 −.000 | UE +.000 −.005 | Keyway | High Speed Shaft * T | Key | V | W | X ♦ | Y | Wt-lb |
|---|---|---|---|---|---|---|---|---|---|---|---|---|---|---|---|---|
| **405** | 5.000 | 1.250 x 1.250 x 7.500 | 8.66 | .750 | 1.88 | 3.50 | 5.375 | 15.249 | 1.000 x .312 | 1.750 | .375 x .375 x 3.000 | 9.70 | 48.41 | 1.125 | 41.12 | 2410 |
| **425** | 5.750 | 1.500 x 1.500 x 8.000 | 10.06 | 1.125 | 2.25 | 3.50 | 6.000 | 15.749 | 1.500 x .265 | 2.250 | .500 x .500 x 4.000 | 10.60 | 56.02 | 1.250 | 46.01 | 3379 |
| **445** | 6.500 | 1.500 x 1.500 x 10.000 | 11.38 | 1.250 | 2.50 | 4.00 | 6.750 | 18.499 | 1.500 x .510 | 2.500 | .625 x .625 x 4.500 | 11.70 | 63.22 | 1.500 | 52.67 | 4697 |
| **465** | 7.250 | 1.750 x 1.500 x 11.000 | 12.68 | 1.250 | 2.50 | 4.75 | 7.500 | 20.999 | 1.500 x .510 | 2.750 | .625 x .625 x 5.000 | 12.60 | 71.12 | 1.500 | 59.43 | 6933 |
| **485** | 8.000 | 2.000 x 1.500 x 12.000 | 14.00 | 1.500 | 3.00 | 5.00 | 8.500 | 23.749 | 1.500 x .510 | 3.500 | .875 x .875 x 6.000 | 13.60 | 81.10 | 2.000 | 59.50 | 8703 |

★ Gear drives are for horizontal floor mounted operation with a maximum momentary tilt of 2° unless specifically stated otherwise. Dimensions are for reference only and are subject to change without notice unless certified.

♦ Use Grade 5 fasteners for diameters through 1.50". For larger diameter fasteners, use ASTM A-354 Grade BC fasteners.

✱ Shaft diameters under 3" are held to limits of +.0000", –.0005". Shaft diameters 3" and over are held to limits of +.000", –.001". Shaft keyseat depth is one-half of key height.

† Dimension shown is for high speed end of drive. Low speed end of drive is 1.90".

‡ Dimension shown for Size 425 is for high speed end of drive. Low speed end is 6.7";
Dimension shown for Size 485 is for high speed end of drive. Low speed end is 9.5".



© Rexnord Industries, LLC, 1998, 2009.

# Type ABX & ABXQ Triple Reduction

## Sizes 505-555/Dimensions — Inches

### Type ABXQ

Refer to Page 114 for dimensions of Hollow Low Speed Shaft with Keeper Plate.

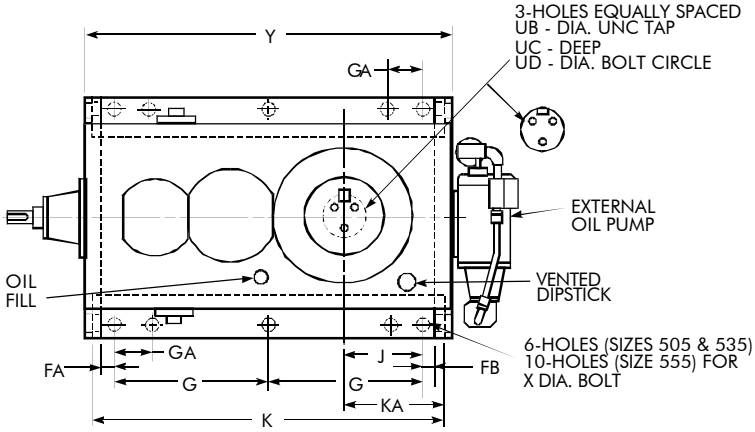


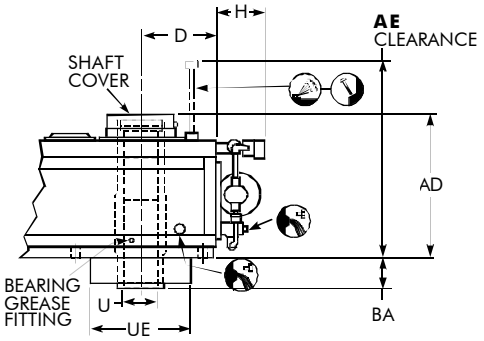


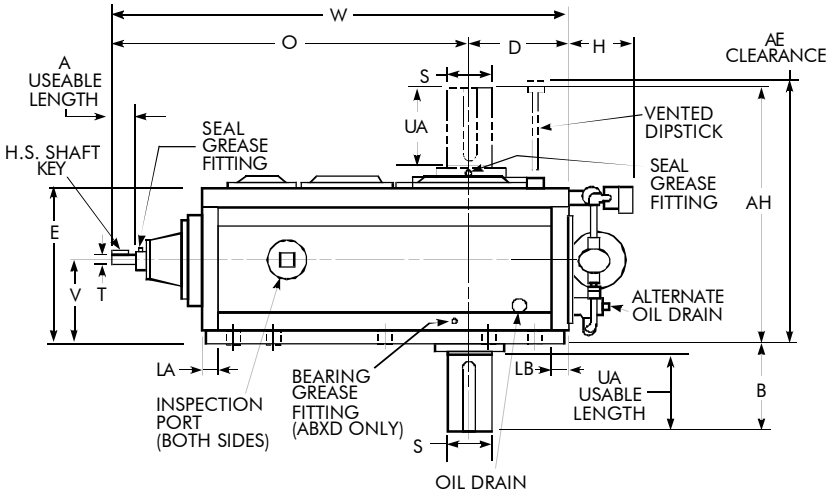


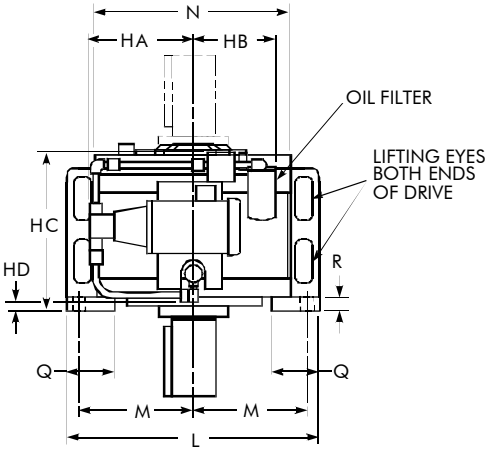


| DRIVE SIZE ★ | A | AD | AE | AH | B | BA | D | E | G | GA | Lubrication System H | HA | HB | HC | HD | J | K | KA | L | M |
|---|---|---|---|---|---|---|---|---|---|---|---|---|---|---|---|---|---|---|---|---|
| **505** | 7.50 | 33.06 | 47.1 | 47.62 | 17.32 | 6.80 | 19.62 | 27.87 | 27.00 | . . . | 9.91 | 16.82 | 16.34 | 27.67 | 2.80 | 13.50 | 64.62 | 18.88 | 50.50 | 22.75 |
| **535** | 7.50 | 35.18 | 50.8 | 52.00 | 19.50 | 6.80 | 22.62 | 30.00 | 31.75 | . . . | 9.91 | 20.00 | 18.84 | 29.68 | 3.05 | 16.50 | 74.25 | 21.75 | 56.50 | 25.75 |
| **555** | 9.00 | 40.39 | 58.5 | 59.30 | 21.80 | 6.60 | 24.62 | 34.95 | 35.00 | 10.00 | 9.91 | 20.00 | 20.84 | 34.51 | 3.41 | 18.00 | 81.75 | 23.75 | 61.50 | 28.25 |

| DRIVE SIZE ★ | N | O | Q | R | Low Speed Shaft * S | Key | UA | UB | UC | UD | Keyed Hollow Low Speed Shaft U +.002 −.000 | UE +.000 −.005 | Keyway | High Speed Shaft * T | Key | V | W | X ♦ | Y | Wt-lb ABX | ABXQ |
|---|---|---|---|---|---|---|---|---|---|---|---|---|---|---|---|---|---|---|---|---|---|
| **505** | 39.25 | 70.71 | 10.50 | 2.25 | 9.250 | 2.500 x 1.750 x 14.00 | 16.18 | 1.500 | 3.00 | 6.00 | 9.001 | 24.999 | 2.000 x .510 | 3.750 | .875 x .875 x 6.50 | 15.16 | 90.33 | 2.250 | 65.83 | 12,450 | 12,500 |
| **535** | 45.25 | 77.80 | 10.50 | 2.25 | 10.500 | 2.500 x 1.750 x 16.00 | 18.38 | 1.500 | 3.00 | 7.50 | 10.501 | 27.999 | 2.500 x .760 | 3.750 | .875 x .875 x 6.50 | 16.25 | 100.42 | 2.250 | 75.92 | 16,500 | 16,650 |
| **555** | 49.25 | 87.40 | 12.00 | 2.31 | 11.500 | 3.000 x 2.000 x 17.00 | 20.12 | 1.750 | 3.50 | 8.00 | 11.502 | 28.999 | 3.000 x .760 | 4.500 | 1.000 x 1.000 x 8.50 | 18.75 | 112.02 | 2.250 | 83.32 | 23,500 | 23,050 |

★ Gear drives are for horizontal floor mounted operation only (output shaft vertical) unless specifically stated otherwise. Consult Factory for other mountings. Dimensions are for reference only and are subject to change without notice unless certified.

♦ Use ASTM A-354 Grade BC fasteners.

✱ Shaft diameters are held to limits of +.000", –.001". Shaft keyseat depth is one-half of key height.

© Rexnord Industries,LLC, 1998, 2009.

# Type ABX & ABXQ Quadruple Reduction

## Sizes 405-485/Dimensions — Inches

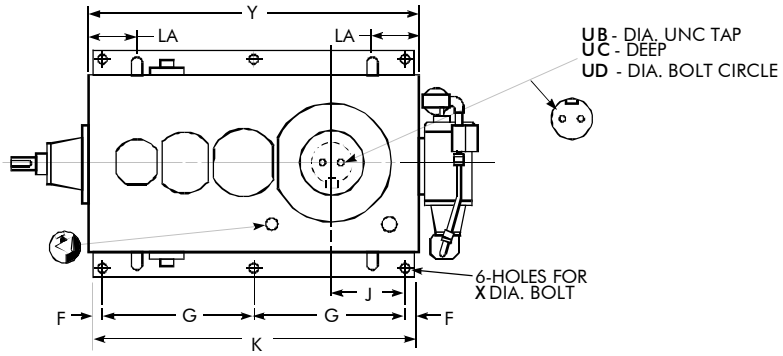


### Type ABXQ

Refer to Page 114 for dimensions of Hollow Low Speed Shaft with Keeper Plate.

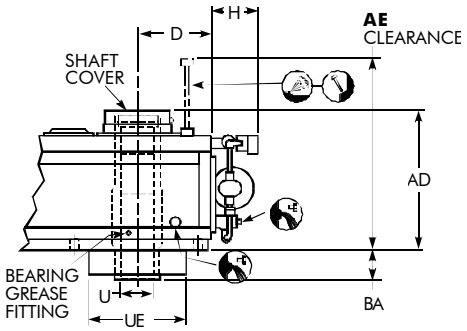


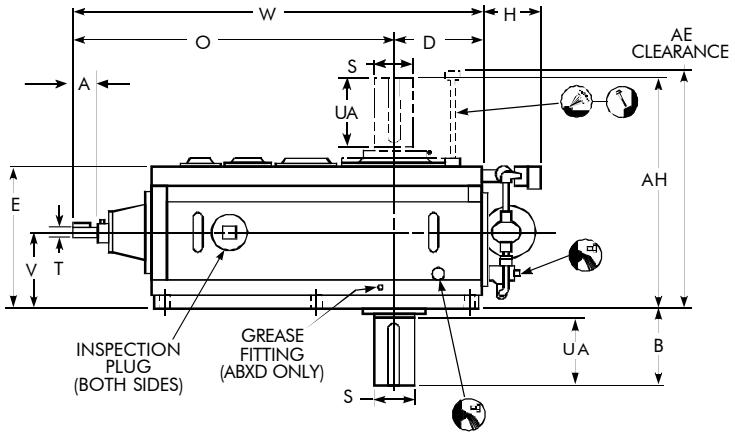


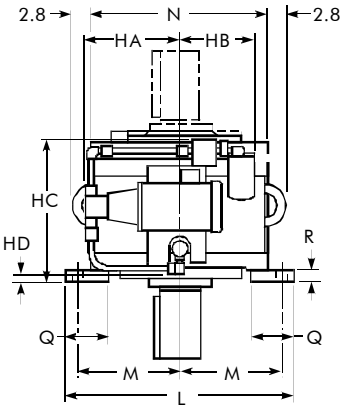


SIZES 425-485

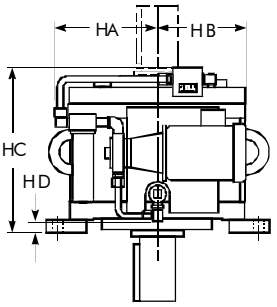


SIZE 405

| DRIVE SIZE ★ | A | AD | AE | AH | B | BA | D | E | F | G | Lubrication System H | HA | HB | HC | HD | J | K | L | LA | M | N | O | Q | R |
|---|---|---|---|---|---|---|---|---|---|---|---|---|---|---|---|---|---|---|---|---|---|---|---|---|
| **405** | 3.00 | 21.34 | 30.6 | 29.10 | 9.70 | 4.50 | 11.31 | 17.65 | 1.50 | 18.50 | 7.47 | 12.71 | 10.88 | 19.99 | 1.25 | 9.20 | 40.00 | 27.75 | 5.7 | 12.50 | 21.62 | 39.60 | 5.00 | 1.50 |
| **425** | 3.50 | 23.50 | 33.5 | 32.20 | 11.00 | 4.00 | 12.31 | 19.45 | 1.50 | 21.00 | 7.65 | 13.19 | 10.03 | 19.57 | 1.35 | 10.25 | 45.00 | 31.80 | 6.6 ‡ | 14.50 | 24.62 | 45.80 | 6.00 | 1.60 |
| **445** | 3.50 | 25.50 | 36.4 | 35.60 | 12.20 | 4.60 | 14.62 | 21.41 | 1.75 | 24.00 | 9.92 | 16.88 | 12.09 | 21.42 | 1.18 | 12.25 | 51.50 | 37.00 | 6.7 | 16.75 | 29.25 | 49.89 | 7.00 | 1.81 |
| **465** | 4.50 | 27.23 | 39.2 | 39.20 | 14.00 | 4.60 | 16.62 | 23.16 | 1.95 † | 27.20 | 9.92 | 18.88 | 13.34 | 23.20 | 1.42 | 14.10 | 58.25 | 41.00 | 7.7 | 18.75 | 33.25 | 58.20 | 7.00 | 1.79 |
| **485** | 5.00 | 29.18 | 41.9 | 43.10 | 15.90 | 5.40 | 18.50 | 25.00 | 2.41 † | 30.60 | 9.92 | 18.88 | 15.09 | 24.97 | 1.87 | 15.60 | 56.90 | 46.50 | 9.4 ‡ | 21.00 | 37.00 | 64.60 | 8.00 | 2.00 |

| DRIVE SIZE ★ | Low Speed Shaft * S | Key | UA | UB | UC | UD | Keyed Hollow Low Speed Shaft U +.002 −.000 | UE +.000 −.005 | Key | High Speed Shaft * T | Key | V | W | X ♦ | Y | Wt-lb |
|---|---|---|---|---|---|---|---|---|---|---|---|---|---|---|---|---|
| **405** | 5.000 | 1.250 x 1.250 x 7.500 | 8.66 | .750 | 1.88 | 3.50 | 5.375 | 15.249 | 1.000 x .312 | 1.500 | .375 x .375 x 2.500 | 9.70 | 50.91 | 1.125 | 41.12 | 2558 |
| **425** | 5.750 | 1.500 x 1.500 x 8.000 | 10.06 | 1.125 | 2.25 | 3.50 | 6.000 | 15.749 | 1.500 x .265 | 1.750 | .375 x .375 x 3.000 | 10.60 | 58.11 | 1.250 | 46.01 | 3383 |
| **445** | 6.500 | 1.500 x 1.500 x 10.000 | 11.38 | 1.250 | 2.50 | 4.00 | 6.750 | 18.499 | 1.500 x .510 | 1.750 | .375 x .375 x 3.000 | 11.70 | 64.51 | 1.500 | 52.67 | 4664 |
| **465** | 7.250 | 1.750 x 1.500 x 11.000 | 12.68 | 1.250 | 2.50 | 4.75 | 7.500 | 20.999 | 1.500 x .510 | 2.250 | .500 x .500 x 4.000 | 12.60 | 74.82 | 1.500 | 59.43 | 6990 |
| **485** | 8.000 | 2.000 x 1.500 x 12.000 | 14.00 | 1.500 | 3.00 | 5.00 | 8.500 | 23.749 | 1.500 x .510 | 2.500 | .625 x .625 x 4.500 | 13.60 | 83.10 | 2.000 | 67.04 | 9184 |

★ Gear drives are for horizontal floor mounted operation with a maximum momentary tilt of 2° unless specifically stated otherwise. Dimensions are for reference only and are subject to change without notice unless certified.

♦ Use Grade 5 fasteners for diameters through 1.50". For larger diameter fasteners, use ASTM A-354 Grade BC fasteners.

✱ Shaft diameters under 3" are held to limits of +.0000", –.0005". Shaft diameters 3" and over are held to limits of +.000", –.001". Shaft keyseat depth is one-half of key height.

† Dimension shown for Size 465 is for high speed end of drive. Low speed end is 1.90";
Dimension shown for Size 485 is for high speed end of drive. Low speed end is 2.29".

‡ Dimension shown for Size 425 is for high speed end of drive. Low speed end is 6.7";
Dimension shown for Size 485 is for high speed end of drive. Low speed end is 9.5".


© Rexnord Industries, LLC, 1998, 2009.

# Type ABX & ABXQ Quadruple Reduction

## Sizes 505-555/Dimensions — Inches

### Type ABXQ

Refer to Page 114 for dimensions of Hollow Low Speed Shaft with Keeper Plate.

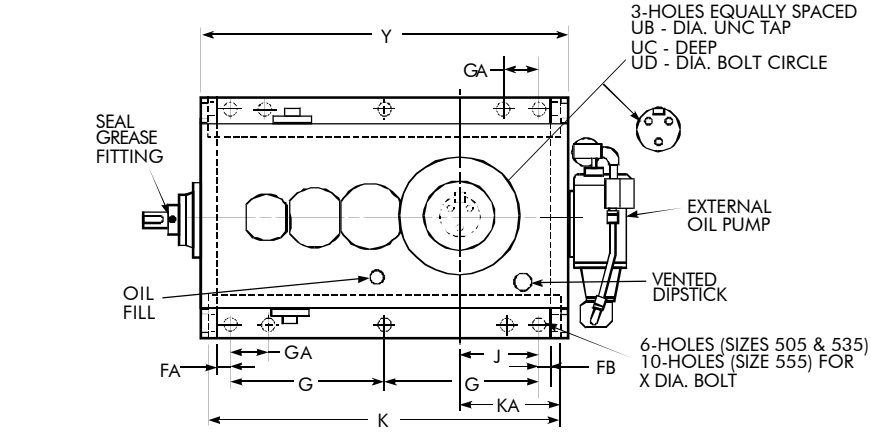


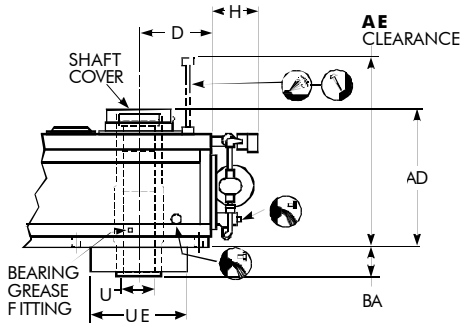


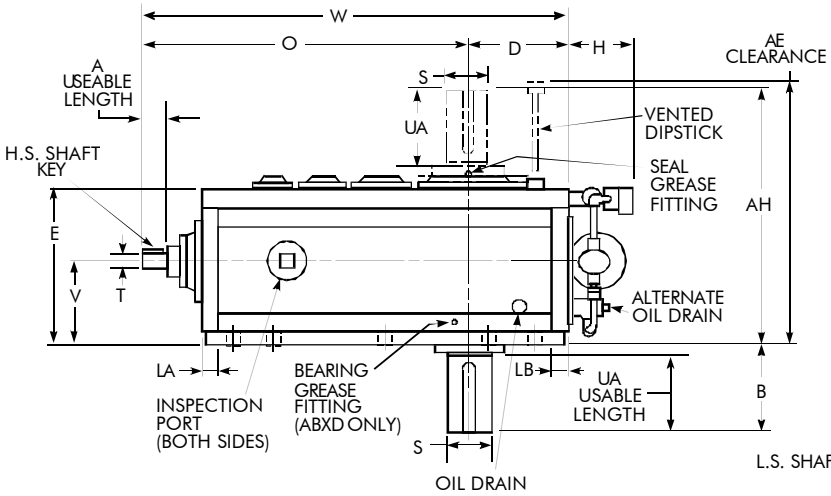


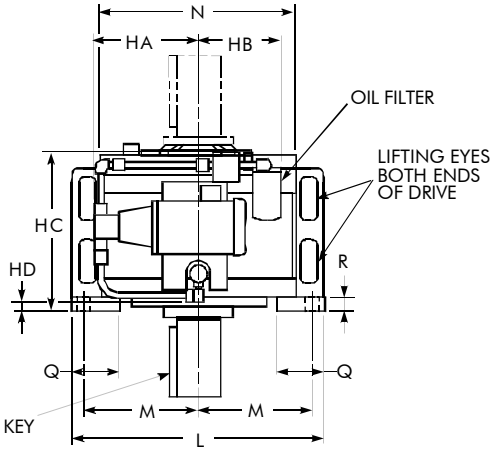


| DRIVE SIZE ★ | A | AD | AE | AH | B | BA | D | E | G | GA | Lubrication System H | HA | HB | HC | HD | J | K | KA | L | M |
|---|---|---|---|---|---|---|---|---|---|---|---|---|---|---|---|---|---|---|---|---|
| **505** | 5.50 | 33.06 | 47.1 | 47.62 | 17.32 | 6.80 | 19.62 | 27.87 | 31.00 | . . . | 9.91 | 16.82 | 16.34 | 27.67 | 2.80 | 13.50 | 72.90 | 18.88 | 50.50 | 22.75 |
| **535** | 5.50 | 35.18 | 50.8 | 52.00 | 19.50 | 6.80 | 22.62 | 30.00 | 35.75 | . . . | 9.91 | 20.00 | 18.84 | 29.68 | 3.05 | 16.50 | 82.25 | 21.75 | 56.50 | 25.75 |
| **555** | 7.50 | 40.39 | 58.5 | 59.30 | 21.80 | 6.60 | 24.62 | 34.95 | 40.00 | 10.00 | 9.91 | 20.00 | 20.84 | 34.51 | 3.41 | 18.00 | 92.75 | 23.75 | 61.50 | 28.25 |

| DRIVE SIZE ★ | N | O | Q | R | Low Speed Shaft * S | Key | UA | UB | UC | UD | Keyed Hollow Low Speed Shaft U +.002 −.000 | UE +.000 −.005 | Keyway | High Speed Shaft * T | Key | V | W | X ♦ | Y | Wt-lb ABX | ABXQ |
|---|---|---|---|---|---|---|---|---|---|---|---|---|---|---|---|---|---|---|---|---|---|
| **505** | 39.25 | 72.02 | 10.50 | 2.25 | 9.250 | 2.500 x 1.750 x 14.00 | 16.18 | 1.500 | 3.00 | 6.00 | 9.001 | 24.999 | 2.000 x .510 | 2.750 | .625 x .625 x 5.00 | 15.16 | 91.64 | 2.250 | 74.28 | 13,200 | 13,250 |
| **535** | 45.25 | 79.02 | 10.50 | 2.25 | 10.500 | 2.500 x 1.750 x 16.00 | 18.38 | 1.500 | 3.00 | 7.50 | 10.501 | 27.999 | 2.500 x .760 | 2.750 | .625 x .625 x 5.00 | 16.25 | 101.64 | 2.250 | 84.28 | 18,550 | 18,400 |
| **555** | 49.25 | 94.21 | 12.00 | 2.31 | 11.500 | 3.000 x 2.000 x 17.00 | 20.12 | 1.750 | 3.50 | 8.00 | 11.502 | 28.999 | 3.000 x .760 | 3.750 | .875 x .875 x 6.50 | 18.75 | 118.83 | 2.250 | 94.32 | 24,600 | 22,950 |

★ Gear drives are for horizontal floor mounted operation only (output shaft vertical) unless specifically stated otherwise. Consult Factory for other mountings. Dimensions are for reference only and are subject to change without notice unless certified.

♦ Use ASTM A-354 Grade BC fasteners.

✱ Shaft diameters under 3" are held to limits of +.0000", –.0005". Shaft diameters 3" and over are held to limits of +.000", –.001". Shaft keyseat depth is one-half of key height.

© Rexnord Industries,LLC, 1998, 2009.

Type AR & AXV

# Availability & Compatibility of Accessories

| TYPE AR | Electric Fan High Speed End | Electric Fan Low Speed End | Shaft Fan | Cooling Tubes ▲ | Pump & Cooler | Flange Motor Adapter‡ | Motor Mount * | Motor Bracket * | Backstop | Torque Arm |
|---|---|---|---|---|---|---|---|---|---|---|
| **Electric Fan, High Speed End** | . . . | . . . | . . . | . . . | . . . | † | . . . | † | . . . | . . . |
| **Electric Fan, Low Speed End** | . . . | . . . | . . . | . . . | . . . | OK | OK | OK | OK | OK |
| **Shaft Fan** | . . . | . . . | . . . | . . . | . . . | . . . | ★ | . . . | OK | OK |
| **Cooling Tubes** | . . . | . . . | . . . | . . . | . . . | OK | . . . | OK | OK | OK |
| **Pump & Cooler** | . . . | . . . | . . . | . . . | . . . | OK | OK | OK | OK | OK |
| **Flange Motor Adapter ‡** | † | OK | . . . | OK | OK | . . . | . . . | . . . | OK | OK |
| **Motor Mount** | . . . | OK | ★ | . . . | OK | . . . | . . . | . . . | OK | OK |
| **Motor Bracket** | † | OK | . . . | OK | OK | . . . | . . . | . . . | OK | OK |
| **Backstop** | . . . | OK | OK | OK | OK | OK | OK | OK | . . . | OK |
| **Torque Arm** | . . . | OK | OK | OK | OK | OK | OK | OK | OK | . . . |

| TYPE AXV | Electric Fan High Speed End | Electric Fan Low Speed End ● | Cooling Tubes ▲ | Pump & Cooler | Flange Motor Adapter ‡ | Motor Mount * | Motor Bracket * |
|---|---|---|---|---|---|---|---|
| **Electric Fan, High Speed End** | . . . | . . . | . . . | . . . | † | . . . | † |
| **Electric Fan, Low Speed End ●** | . . . | . . . | . . . | . . . | OK | OK | OK |
| **Cooling Tubes** | . . . | . . . | . . . | . . . | OK | . . . | OK |
| **Pump & Cooler** | . . . | . . . | . . . | . . . | OK | OK | OK |
| **Flange Motor Adapter ‡** | † | OK | OK | OK | . . . | . . . | . . . |
| **Motor Mount** | . . . | OK | . . . | OK | . . . | . . . | . . . |
| **Motor Bracket** | † | OK | OK | OK | . . . | . . . | . . . |

★ Check usable shaft length and potential interference between fan and motor mount.
† Double reduction only.
‡ Will be developed upon receipt of order.
● External lubrication pump is mounted in the alternate location, refer to Page 111.
▲ Cooling tubes not available for Sizes 505, 535, & 555.
✱ All motor accessories for Sizes 505, 535, & 555 will be developed upon receipt of order.


© Rexnord Industries, LLC, 1998, 2009.

Type ABR & ABX

# Availability & Compatibility of Accessories

| TYPE ABR | Electric Fan Low Speed End | Shaft Fan | Cooling Tubes ▲ | Pump & Cooler | Flange Motor Adapter * | Motor Mount * | Motor Bracket * | Backstop | Torque Arm |
|---|---|---|---|---|---|---|---|---|---|
| **Electric Fan, Low Speed End** | . . . | . . . | . . . | . . . | OK | OK | OK | OK | OK |
| **Shaft Fan** | . . . | . . . | . . . | . . . | . . . | ★ | . . . | ★ | . . . |
| **Cooling Tubes** | . . . | . . . | . . . | . . . | . . . | OK | . . . | OK | OK |
| **Pump & Cooler** | . . . | . . . | . . . | . . . | OK | OK | OK | OK | OK |
| **Flange Motor Adapter** | OK | . . . | . . . | OK | ★ | . . . | . . . | OK | OK |
| **Motor Mount** | OK | ★ | OK | OK | . . . | . . . | . . . | . . . | OK |
| **Motor Bracket** | OK | . . . | . . . | OK | . . . | . . . | . . . | OK | OK |
| **Backstop** | OK | ★ | OK | OK | OK | . . . | OK | . . . | OK |
| **Torque Arm** | OK | . . . | OK | OK | OK | OK | OK | OK | . . . |

| TYPE ABX | Electric Fan Low Speed End ● | Shaft Fan | Cooling Tubes ▲ | Pump & Cooler | Flange Motor Adapter * | Motor Mount * | Motor Bracket * |
|---|---|---|---|---|---|---|---|
| **Electric Fan, Low Speed End ●** | ★ | . . . | . . . | . . . | OK | ★ | OK |
| **Shaft Fan** | . . . | . . . | . . . | . . . | . . . | ★ | . . . |
| **Cooling Tubes** | . . . | . . . | . . . | . . . | . . . | OK | . . . |
| **Pump & Cooler** | . . . | . . . | . . . | . . . | OK | OK | OK |
| **Flange Motor Adapter ‡** | OK | . . . | . . . | OK | . . . | . . . | . . . |
| **Motor Mount** | ★ | ★ | OK | OK | . . . | . . . | . . . |
| **Motor Bracket** | OK | . . . | . . . | OK | . . . | . . . | . . . |

★ Will be developed upon receipt of order.
● External lubrication pump is mounted in the alternate location, refer to Page 111.
▲ Cooling tubes not available for Sizes 505, 535, & 555. Sizes 405 & 425 require alternate pump location.
✱ All motor accessories for Sizes 505, 535, & 555 will be developed upon receipt of order.

© Rexnord Industries, LLC, 1998, 2009.

# Type A
## Shaft Driven Fan Clearance/Dimensions — Inches

### Single Reduction ★

| DRIVE SIZE ● | AA | AB | AC | AE |
|---|---|---|---|---|
| **305** | 2.15 | 3.44 | 2.88 | 10.44 |
| **325** | 2.25 | 3.75 | 3.13 | 11.81 |
| **345** | 2.75 | 4.62 | 4.38 | 12.44 |
| **365** | 3.06 | 5.31 | 4.00 | 14.25 |

● Sizes 385 thru 525A1 are not available with shaft driven fans.

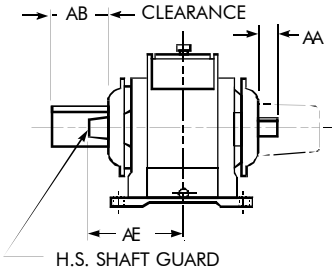


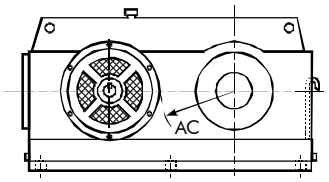


### Double Reduction ★

| DRIVE SIZE ■ | AA | AB | AC | AD ‡ | AE | DRIVE SIZE ■ | AA | AB | AC | AD ‡ | AE |
|---|---|---|---|---|---|---|---|---|---|---|---|
| **305** | 1.44 | 3.44 | 7.63 | 1.31 | 10.00 | **425** | 3.50 | 8.00 | 9.50 | . . . | 18.06 |
| **325** | 1.81 | 4.06 | 9.56 | 1.12 | 10.38 | **445** | 4.12 | 8.82 | 11.42 | . . . | 20.60 |
| **345** | 2.19 | 4.81 | 11.38 | .68 | 11.44 | **465** | 5.12 | 10.60 | 13.62 | . . . | 23.00 |
| **365** | 2.25 | 5.25 | 13.19 | .62 | 13.25 | **485** | 5.82 | 13.62 | 17.12 | .76 | 24.10 |
| **385** | 2.62 | 6.40 | 7.06 | . . . | 14.90 | **505** | 6.26 | 14.40 | 18.50 | 1.38 | 27.70 |
| **405** | 2.82 | 7.06 | 8.06 | . . . | 16.32 | **525** | 7.38 | 17.50 | 22.00 | 1.12 | 28.25 |

★ Dimensions are for reference only and are subject to change without notice unless certified.

‡ Where there is no dimension shown, fan does not extend beyond housing.

■ Sizes 545 thru 585A2 are not available with shaft driven fans.

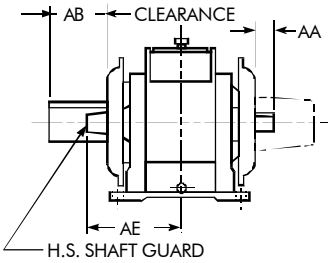


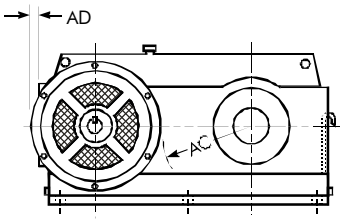


### Triple Reduction ★

| DRIVE SIZE ■ | AA | AB | AC | AD ‡ | AE | DRIVE SIZE ■ | AA | AB | AC | AD ‡ | AE |
|---|---|---|---|---|---|---|---|---|---|---|---|
| **385** | 2.06 | 7.12 | 14.76 | .76 | 13.68 | **505** | 4.18 | 15.53 | 32.12 | . . . | 23.60 |
| **405** | 1.88 | 7.76 | 16.02 | 1.38 | 14.65 | **525** | 5.00 | 18.08 | 37.12 | .50 | 25.38 |
| **425** | 2.38 | 8.94 | 19.02 | .42 | 15.66 | **545** | 5.50 | 18.25 | 42.25 | .37 | 30.71 |
| **445** | 2.68 | 10.00 | 21.76 | .98 | 17.40 | **565** | 6.25 | 19.31 | 45.60 | . . . | 34.59 |
| **465** | 2.75 | 11.68 | 25.08 | 1.32 | 18.92 | **585** | 6.75 | 21.04 | 50.10 | . . . | 37.18 |
| **485** | 3.58 | 14.58 | 28.56 | .42 | 20.62 | | | | | | |

★ Dimensions are for reference only and are subject to change without notice unless certified.

‡ Where there is no dimension shown, fan does not extend beyond housing.

■ Sizes 305 thru 365A3 are not available with shaft driven fans.

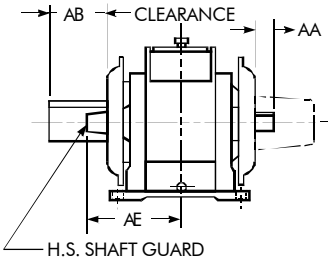


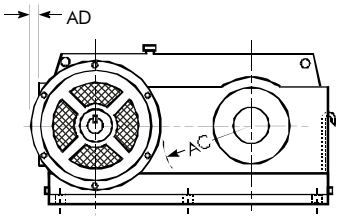


### Quadruple Reduction ★

| DRIVE SIZE † | AA | AB | AC | AE |
|---|---|---|---|---|
| **445** | 2.32 | 10.88 | 24.58 | 16.00 |
| **465** | 2.32 | 12.68 | 28.75 | 16.92 |
| **485** | 2.98 | 15.41 | 32.37 | 19.30 |
| **505** | 3.50 | 16.74 | 35.26 | 21.36 |
| **525** | 3.82 | 19.00 | 39.38 | 23.00 |

★ Dimensions are for reference only and are subject to change without notice unless certified.

† Fan assemblies must be removed from drive to install foundation bolts. Sizes 385 thru 425A4 are not available with shaft fans.

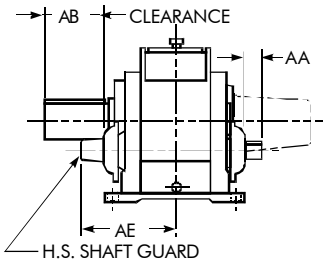


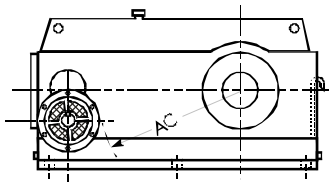




© Rexnord Industries, LLC, 1998, 2009.

# Type AR, ARJ & AXV

## Shaft Driven Fan Clearance/Dimensions — Inches

### Double Reduction

| DRIVE SIZE ★ | AA | AC | AD‡ |
|---|---|---|---|
| **405** | 2.82 | 8.06 | . . . . |
| **425** | 3.50 | 9.50 | . . . . |
| **445** | 4.12 | 11.42 | . . . . |
| **465** | 5.12 | 13.62 | . . . . |
| **485** | 5.82 | 17.12 | .44 |

‡ Where dimensions are not shown, fan does not extend beyond housing.

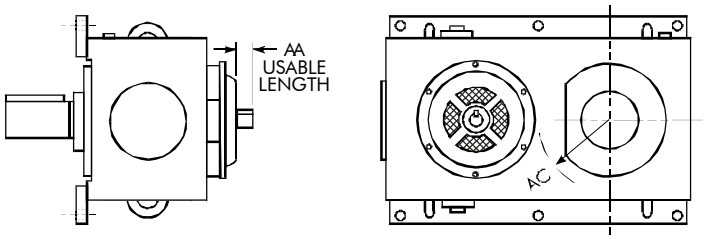


### Triple Reduction

| DRIVE SIZE ★ | AA | AC | AD‡ |
|---|---|---|---|
| **405** | 1.88 | 16.02 | .12 |
| **425** | 2.38 | 19.02 | . . . . |
| **445** | 2.68 | 21.76 | .02 |
| **465** | 2.75 | 25.08 | . . . . |
| **485** | 3.58 | 28.56 | .43 |

‡ Where dimensions are not shown, fan does not extend beyond housing.

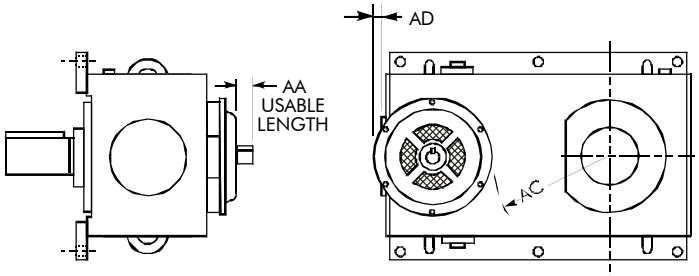


### Quadruple Reduction

| DRIVE SIZE ★ | AA | AC |
|---|---|---|
| **445** | 2.32 | 24.58 |
| **465** | 2.32 | 28.75 |
| **485** | 2.98 | 32.37 |

★ Dimensions are for reference only and are subject to change without notice unless certified.

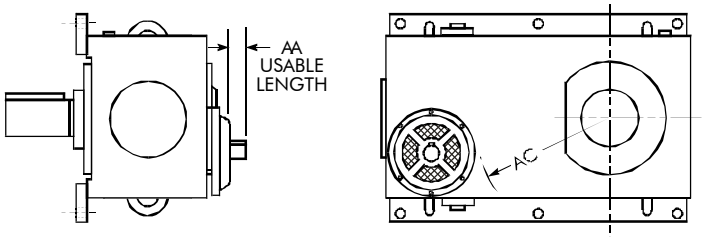


© Rexnord Industries,LLC, 1998, 2009.

# Type ABR & ABX Triple & Quadruple Reduction

## Shaft Driven Fan Clearance/Dimensions — Inches

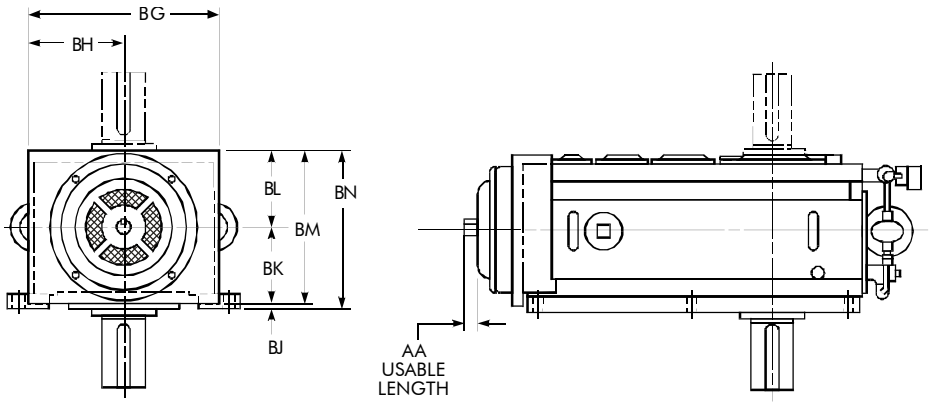


| DRIVE SIZE ★ | AA | | BG | BH | BJ | BK | BL | BM | BN |
|---|---|---|---|---|---|---|---|---|---|
| | Triple Reduction | Quadruple Reduction | | | | | | | |
| **405** | 1.88 | . . . | 23.05 | 11.52 | .63 | 9.07 | 9.07 | 18.14 | 18.77 |
| **425** | 2.56 | 1.88 | 26.05 | 13.02 | .53 | 10.07 | 10.07 | 20.14 | 20.67 |
| **445** | 2.76 | 1.88 | 30.55 | 15.27 | .76 | 10.94 | 10.94 | 21.88 | 22.64 |
| **465** | 2.88 | 2.56 | 34.55 | 17.27 | .40 | 12.20 | 12.20 | 24.40 | 24.80 |
| **485** | 4.12 | 2.76 | 38.30 | 19.15 | .53 | 13.07 | 13.07 | 26.14 | 26.67 |

★ Dimensions are for reference only and are subject to change without notice unless certified.


© Rexnord Industries, LLC, 1998, 2009.

# Type A
## Electric Fan Clearance/Dimensions — Inches

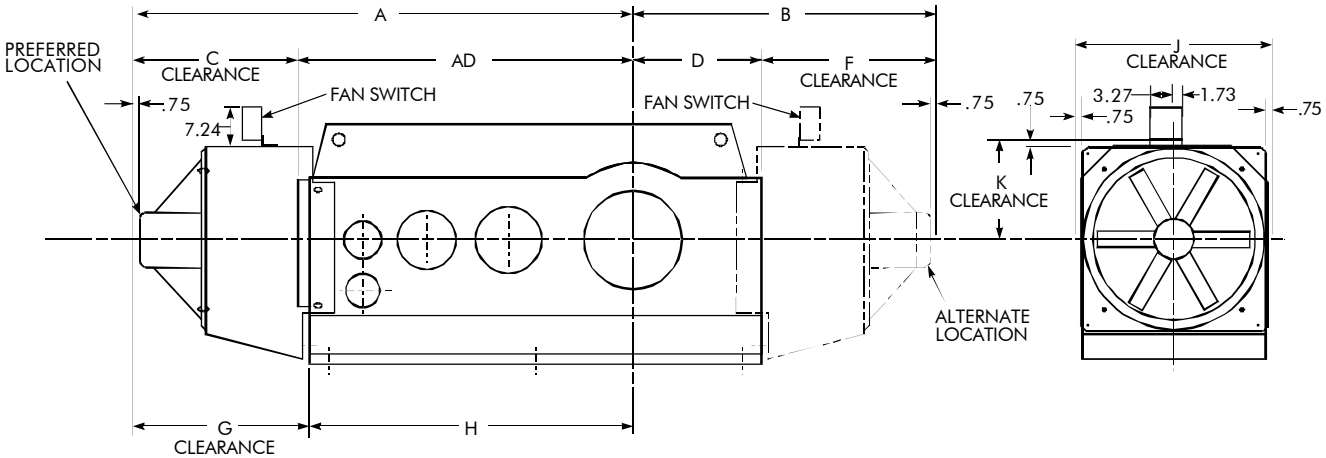


| DRIVE SIZE ★ | Reduction | Fan Diameter | A | B | C | AD | D | F | G | H | J | K |
|---|---|---|---|---|---|---|---|---|---|---|---|---|
| **305** | 1, 2, & 3 | 12 | 33.1 | 26.6 | 17.62 | 15.50 | 8.50 | 18.12 | 18.12 | 15.00 | 17.5 | 9.5 |
| **325** | 1, 2, & 3 | 12 | 35.3 | 27.5 | 17.62 | 17.63 | 9.50 | 18.00 | 18.00 | 17.25 | 17.5 | 9.5 |
| **345** | 1, 2, & 3 | 12 | 37.6 | 28.6 | 17.62 | 20.00 | 16.62 | 18.00 | 18.00 | 19.62 | 17.5 | 9.5 |
| **365** | 1, 2, & 3 | 14 | 40.9 | 30.1 | 17.62 | 23.25 | 12.13 | 18.00 | 18.00 | 22.87 | 19.1 | 10.6 |
| **385** | 1<br>2, 3, & 4 | 16<br>14 | 36.2<br>44.9 | 28.1<br>28.8 | 17.43<br>17.60 | 18.74<br>27.28 | 10.06<br>10.24 | 17.99<br>18.52 | 17.99<br>18.52 | 18.18<br>26.36 | 21.5<br>19.5 | 10.9<br>10.6 |
| **405** | 1<br>2, 3, & 4 | 18<br>14 | 39.6<br>47.5 | 30.0<br>29.1 | 18.14<br>17.49 | 21.44<br>30.00 | 11.20<br>11.20 | 18.78<br>17.89 | 18.78<br>17.89 | 20.80<br>29.60 | 23.0<br>19.5 | 11.9<br>9.9 |
| **425** | 1<br>2, 3, & 4 | 20<br>16 | 42.2<br>53.9 | 32.9<br>33.9 | 18.86<br>19.94 | 23.26<br>33.96 | 12.74<br>12.74 | 20.12<br>21.14 | 20.12<br>21.14 | 22.00<br>32.76 | 28.0<br>21.5 | 14.1<br>10.9 |
| **445** | 1<br>2, 3, & 4 | 22<br>18 | 50.3<br>57.9 | 39.3<br>35.4 | 23.11<br>19.40 | 27.14<br>38.50 | 14.50<br>14.50 | 24.75<br>20.90 | 24.75<br>20.90 | 25.50<br>37.00 | 30.0<br>23.0 | 14.9<br>11.9 |
| **465** | 1<br>2, 3, & 4 | 24<br>20 | 55.4<br>63.7 | 42.4<br>38.7 | 24.82<br>20.70 | 30.50<br>43.00 | 16.50<br>16.50 | 25.82<br>22.20 | 25.82<br>22.20 | 29.50<br>41.50 | 30.5<br>26.3 | 15.4<br>14.1 |
| **485** | 1<br>2<br>3 & 4 | 24<br>22<br>22 | 61.6<br>62.2<br>69.7 | 49.6<br>41.2<br>41.2 | 28.08<br>20.00<br>20.00 | 33.50<br>42.12<br>49.62 | 19.00<br>19.00<br>19.00 | 30.58<br>22.12<br>22.12 | 30.58<br>22.12<br>22.12 | 31.00<br>40.00<br>47.50 | 30.5<br>28.0<br>28.0 | 15.4<br>14.1<br>14.1 |
| **505** | 1<br>2<br>3 & 4 | 28<br>24<br>24 | 63.9<br>70.7<br>80.0 | 50.9<br>46.2<br>46.2 | 27.90<br>23.57<br>23.57 | 36.00<br>47.12<br>56.42 | 20.50<br>20.50<br>20.50 | 30.40<br>25.69<br>25.69 | 30.40<br>25.69<br>25.69 | 33.50<br>45.00<br>54.30 | 34.2<br>30.5<br>30.5 | 17.3<br>15.4<br>15.4 |
| **525** | 1<br>2<br>3 & 4 | 28<br>24<br>24 | 66.9<br>75.4<br>85.9 | 52.4<br>50.4<br>50.4 | 26.90<br>25.52<br>25.52 | 40.00<br>50.88<br>60.38 | 22.50<br>22.50<br>22.50 | 29.90<br>27.90<br>27.90 | 29.90<br>27.90<br>27.90 | 37.00<br>48.50<br>58.00 | 34.2<br>30.5<br>30.5 | 17.3<br>15.4<br>15.4 |
| **545** | 2<br>3 | 28<br>28 | 86.8<br>95.3 | 54.8<br>54.8 | 29.37<br>27.87 | 57.38<br>67.38 | 24.50<br>24.50 | 30.25<br>30.25 | 31.75<br>30.25 | 55.00<br>65.00 | 42.5<br>42.5 | 24.0<br>24.0 |
| **565** | 2<br>3 | 28<br>28 | 89.3<br>104.3 | 56.8<br>56.8 | 27.87<br>27.87 | 61.88<br>76.38 | 25.50<br>25.50 | 31.25<br>31.25 | 30.25<br>30.25 | 59.50<br>74.00 | 46.7<br>46.7 | 21.6<br>21.6 |
| **585** | 2<br>3 | 28<br>28 | 96.3<br>109.3 | 59.3<br>59.3 | 27.87<br>27.87 | 68.38<br>71.38 | 29.00<br>29.00 | 30.25<br>30.25 | 30.25<br>30.25 | 66.00<br>79.00 | 52.0<br>52.0 | 21.6<br>21.6 |

★ Drawings are representative of this series of drives and may not agree in exact detail for all drive sizes. Dimensions are for reference only and are subject to change without notice unless certified.

© Rexnord Industries,LLC, 1998, 2009.

# Type AB All Reductions

## Electric Fan Clearance/Dimensions — Inches

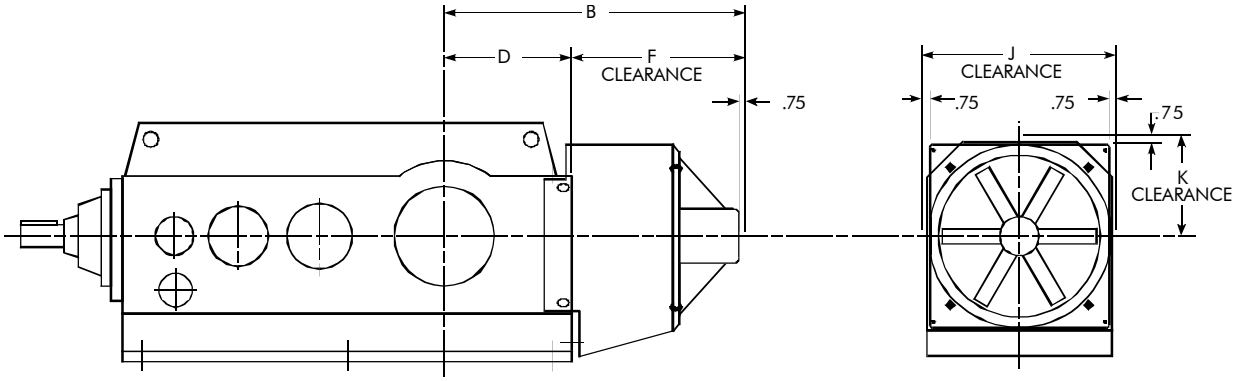


| DRIVE SIZE ★ | Reduction | Fan Diameter | B | D | F | J | K |
|---|---|---|---|---|---|---|---|
| 385 | AB2 | 16 | 28.1 | 10.06 | 17.99 | 21.5 | 10.9 |
| | AB3 & AB4 | 14 | 28.8 | 10.24 | 18.52 | 19.5 | 10.6 |
| 405 | AB2 | 18 | 30.0 | 11.20 | 18.78 | 23.0 | 11.9 |
| | AB3 & AB4 | 14 | 29.1 | 11.20 | 17.89 | 19.5 | 9.9 |
| 425 | AB2 | 20 | 32.9 | 12.74 | 20.12 | 28.0 | 14.1 |
| | AB3 & AB4 | 16 | 33.9 | 12.74 | 21.14 | 21.5 | 10.9 |
| 445 | AB2 | 22 | 39.3 | 14.50 | 24.75 | 30.0 | 14.9 |
| | AB3 & AB4 | 18 | 35.4 | 14.50 | 20.90 | 23.0 | 11.9 |
| 465 | AB2 | 24 | 42.4 | 16.50 | 25.82 | 30.5 | 15.4 |
| | AB3 & AB4 | 20 | 38.7 | 16.50 | 22.20 | 26.3 | 14.1 |
| 485 | AB2 | 24 | 49.6 | 18.50 | 30.58 | 30.5 | 15.4 |
| | AB3 | 22 | 41.2 | 18.50 | 22.12 | 28.0 | 14.1 |
| | AB4 | 22 | 41.2 | 18.50 | 22.12 | 28.0 | 14.1 |
| 505 | AB2 | 28 | 50.9 | 20.00 | 30.40 | 34.2 | 17.3 |
| | AB3 | 24 | 46.2 | 20.00 | 25.69 | 30.5 | 15.4 |
| | AB4 | 24 | 46.2 | 20.00 | 25.69 | 30.5 | 15.4 |
| 525 | AB2 | 28 | 52.4 | 22.50 | 29.90 | 34.2 | 17.3 |
| | AB3 | 24 | 50.4 | 22.50 | 27.90 | 30.5 | 15.4 |
| | AB4 | 24 | 50.4 | 22.50 | 27.90 | 30.5 | 15.4 |

★ Dimensions are for reference only and are subject to change without notice unless certified.


© Rexnord Industries, LLC, 1998, 2009.

# Type AR & AXV

## Electric Fan Clearance/Dimensions — Inches

When Type AXV gear drives are furnished with electric fan, the external pump is mounted in the alternate location. Refer to Page 111.

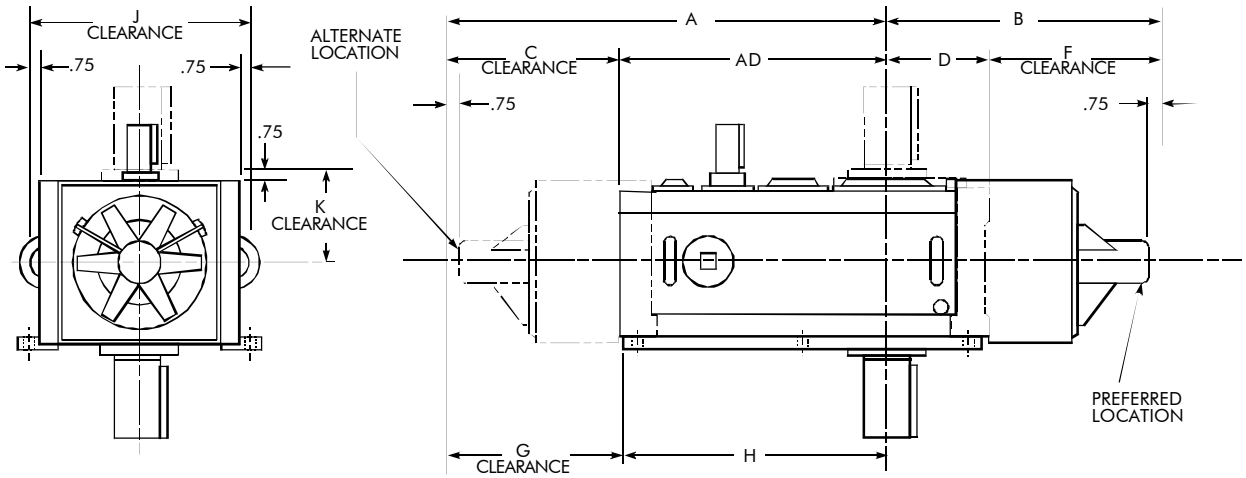


| DRIVE SIZE ★ | Reduction | Fan Dia | A | B | C | AD | D | F | G | H | J | K |
|---|---|---|---|---|---|---|---|---|---|---|---|---|
| **405** | All | 14.0 | 49.15 | 30.55 | 19.34 | 29.81 | 11.31 | 19.24 | 19.85 | 29.30 | 24.55 | 9.82 |
| **425** | All | 16.0 | 54.15 | 32.69 | 20.45 | 33.70 | 12.31 | 20.38 | 20.90 | 33.25 | 27.55 | 10.82 |
| **445** | All | 18.0 | 58.62 | 35.06 | 20.57 | 38.05 | 14.62 | 20.44 | 21.12 | 37.50 | 32.05 | 11.69 |
| **465** | All | 20.0 | 64.74 | 38.43 | 21.93 | 42.81 | 16.62 | 21.81 | 22.49 | 42.25 | 36.05 | 12.95 |
| **485** | 2 | 22.0 | 65.44 | 42.78 | 24.44 | 41.00 | 18.50 | 24.28 | 24.95 | 40.49 | 39.80 | 13.82 |
| **485** | 3 & 4 | 22.0 | 72.96 | 42.78 | 24.42 | 48.54 | 18.50 | 24.48 | 24.95 | 48.01 | 39.80 | 13.82 |

★ Dimensions are for reference only and are subject to change without notice unless certified.

# Type ABR & ABX

## Electric Fan Clearance/Dimensions — Inches

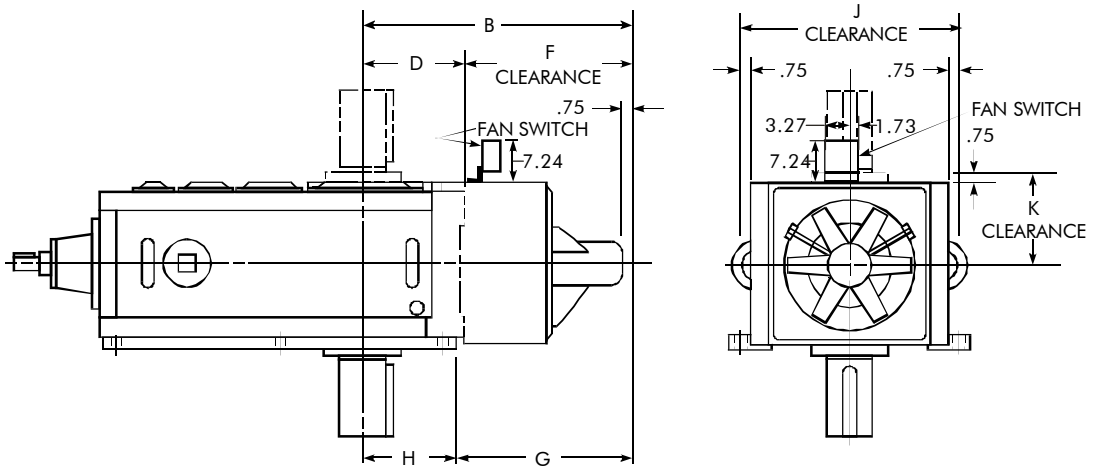


| DRIVE SIZE ★ | Reduction | Fan Dia | B | D | F | G | H | J | K |
|---|---|---|---|---|---|---|---|---|---|
| **405** | 3 & 4 | 14 | 30.55 | 11.31 | 19.24 | 19.85 | 10.70 | 24.55 | 9.82 |
| **425** | 3 & 4 | 16 | 32.69 | 12.31 | 20.38 | 20.94 | 11.75 | 27.55 | 10.82 |
| **445** | 3 & 4 | 18 | 35.06 | 14.62 | 20.44 | 21.06 | 14.00 | 32.05 | 11.69 |
| **465** | 3 & 4 | 20 | 38.43 | 16.62 | 21.81 | 22.43 | 16.00 | 36.05 | 12.95 |
| **485** | 3 & 4 | 22 | 42.78 | 18.50 | 24.28 | 24.89 | 17.89 | 39.80 | 13.82 |

★ Dimensions are for reference only and are subject to change without notice unless certified.

© Rexnord Industries,LLC, 1998, 2009.

# Type A
## Cooling Tube Clearance/Dimensions — Inches

### WATER INLET AND OUTLET CONNECTIONS
(All Drive Sizes and Reductions)

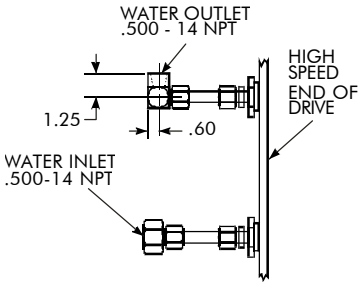


Provide Clearance for Water Connections

| DRIVE SIZE ★ | Reduction | AF | AG | AH | AJ | AK | AL | AX | Std No. of Tubes |
|---|---|---|---|---|---|---|---|---|---|
| 385 | 1 | 3.00 | 4.20 | 6.50 | 4.20 | 5.3 | 6.7 | 41.0 | 4 |
| | 2 & 3 | 2.50 | 3.76 | 4.25 | 1.50 | 5.8 | 5.5 | 48.0 | 2 |
| 405 | 1 | 3.00 | 5.40 | 6.75 | 5.40 | 5.3 | 6.0 | 44.0 | 4 |
| | 2 & 3 | 3.00 | 4.05 | 4.75 | 1.79 | 5.8 | 6.5 | 54.0 | 2 |
| 425 | 1 | 2.50 | 4.10 | 7.15 | 4.10 | 5.3 | 6.5 | 47.0 | 6 |
| | 2 & 3 | 2.20 | 4.75 | 5.55 | 1.59 | 7.3 | 7.3 | 61.0 | 4 |
| 445 | 1 | 3.20 | 7.30 | 7.71 | 2.78 | 5.3 | 5.9 | 52.0 | 6 |
| | 2 & 3 | 2.70 | 4.90 | 5.95 | 1.54 | 5.3 | 5.3 | 63.0 | 4 |
| | 4 | 3.30 | 3.80 | 5.05 | 1.54 | 5.3 | 5.3 | 63.0 | 2 |
| 465 | 1 | 3.20 | 7.25 | 7.68 | 2.74 | 5.5 | 7.3 | 59.0 | 6 |
| | 2 & 3 | 3.00 | 4.75 | 7.00 | 2.50 | 6.5 | 6.5 | 71.0 | 4 |
| | 4 | 3.20 | 4.75 | 4.95 | 2.50 | 6.5 | 6.5 | 71.0 | 2 |
| 485 | 1 | 3.20 | 6.56 | 9.48 | 4.30 | 5.8 | 6.3 | 62.0 | 8 |
| | 2 | 3.50 | 6.60 | 8.00 | 2.08 | 6.5 | 6.3 | 72.0 | 6 |
| | 3 | 3.50 | 6.60 | 8.00 | 2.08 | 5.5 | 5.8 | 78.0 | 6 |
| | 4 | 3.50 | 4.30 | 5.25 | 2.04 | 5.5 | 5.8 | 78.0 | 2 |
| 505 | 1 | 3.70 | 7.46 | 9.98 | 2.94 | 5.5 | 5.4 | 65.0 | 8 |
| | 2 | 3.40 | 8.76 | 7.90 | 4.24 | 6.3 | 6.0 | 78.0 | 6 |
| | 3 | 3.40 | 8.76 | 7.90 | 4.24 | 5.5 | 5.5 | 86.0 | 6 |
| | 4 | 3.70 | 6.46 | 5.45 | 4.20 | 5.5 | 5.5 | 86.0 | 2 |
| 525 | 1 | 4.00 | 8.25 | 10.35 | 6.74 | 5.6 | 5.6 | 71.0 | 8 |
| | 2 | 4.10 | 8.25 | 7.60 | 3.74 | 5.5 | 5.3 | 82.0 | 6 |
| | 3 | 4.10 | 8.25 | 7.60 | 3.74 | 5.5 | 5.8 | 92.0 | 6 |
| | 4 | 4.10 | 5.75 | 5.85 | 3.50 | 5.5 | 5.8 | 92.0 | 2 |
| 545 | 2 | 3.85 | 9.81 | 7.40 | 2.00 | 5.9 | 5.9 | 87.5 | 8 |
| | 3 | 3.85 | 9.81 | 7.40 | 2.00 | 5.6 | 5.6 | 97.5 | 8 |
| 565 | 2 | 4.85 | 10.65 | 8.40 | 3.40 | 5.6 | 5.6 | 93.0 | 8 |
| | 3 | 4.85 | 10.65 | 8.40 | 3.40 | 5.6 | 5.6 | 107.0 | 8 |
| 585 | 2 | 4.85 | 11.90 | 8.40 | 4.10 | 5.9 | 5.9 | 104.0 | 8 |
| | 3 | 4.85 | 11.90 | 8.40 | 4.10 | 5.9 | 5.9 | 116.0 | 8 |

★ Drawings are representative of this series of drives and do not agree in exact detail for all drive sizes. Dimensions are for reference only and are subject to change without notice unless certified. Sizes 305 thru 365, consult Factory.

### ALL DRIVE SIZES & REDUCTIONS (Except 385A1, 405A1, 425A1 & 525A1) ★

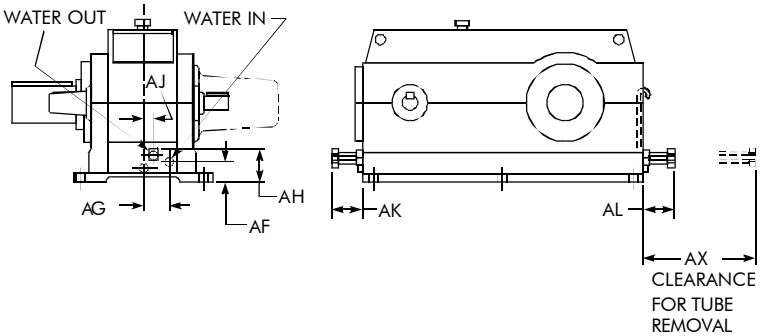


### ALL DRIVE SIZES & REDUCTIONS (Except 385A1, 405A1, 425A1 & 525A1) ★

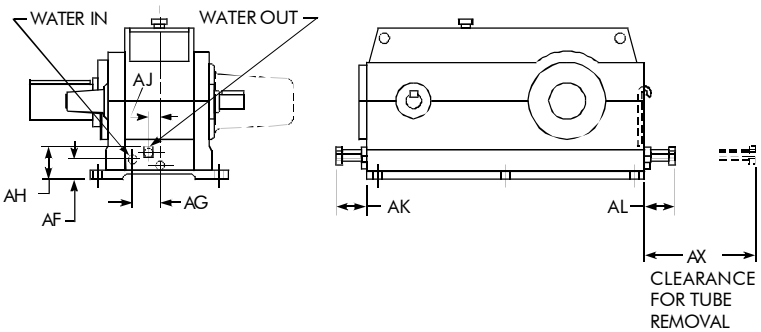


### DRIVE SIZES 385A1, 405A1, 425A1 & 525A1) ★ ASSEMBLIES: ALL

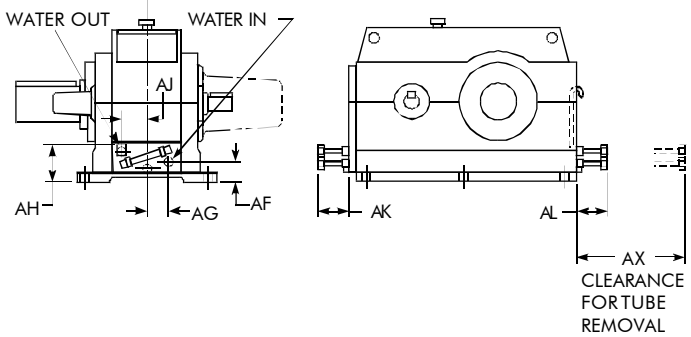


A minimum flow rate of 2 gallons per minute of clean water is required to prevent tube fouling. Flow rates in excess of 5 gallons per minute may prompt tube erosion. Thermal power ratings are based on a water temperature of 70°F (21°C) with 2 gallons per minute for Sizes 385 – 525 and 5 gallons per minute for Sizes 545 – 585.


© Rexnord Industries, LLC, 1998, 2009.

# Type AB
## Cooling Tube Clearance/Dimensions — Inches

### WATER INLET AND OUTLET CONNECTIONS

(All Drive Sizes and Reductions)

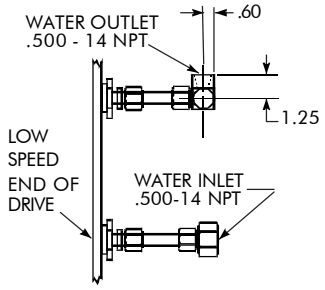


Provide Clearance for Water Connections

| DRIVE SIZE ★ | Reduction | AF | AG | AH | AJ | AK | AL | AX | Std No. of Tubes |
|---|---|---|---|---|---|---|---|---|---|
| 385 | AB2 | 1.88 | 0.00 | 4.38 ♦ | 4.40 ♦ | 5.8 | 6.6 | 41.0 | 3 |
| | AB3 | 2.50 | 3.75 | 4.25 | 1.50 | 5.4 | 5.6 | 48.0 | 2 |
| 405 | AB2 | 2.00 | 0.00 | 4.95 | 5.70 | 6.1 | 5.6 | 44.0 | 4 |
| | AB3 | 3.00 | 4.05 | 4.75 | 1.80 | 5.5 | 6.3 | 53.0 | 2 |
| 425 | AB2 | 2.40 | 2.05 | 5.45 | 6.10 | 6.5 | 6.3 | 48.0 | 4 |
| | AB3 | 2.20 | 4.75 | 5.55 | 1.60 | 7.1 | 7.1 | 60.0 | 4 |
| 445 | AB2 | 2.80 | 7.50 | 5.85 | 0.50 | 6.8 | 5.8 | 63.0 | 6 |
| | AB3 | 2.70 | 4.90 | 5.95 | 1.54 | 5.1 | 5.1 | 62.0 | 4 |
| | AB4 | 3.30 | 3.80 | 5.05 | 1.54 | 5.1 | 5.1 | 62.0 | 2 |
| 465 | AB2 | 2.50 | 7.60 | 5.75 | 1.85 | 6.5 | 7.1 | 60.0 | 6 |
| | AB3 | 3.00 | 4.75 | 7.00 | 2.50 | 6.3 | 6.3 | 71.0 | 4 |
| | AB4 | 3.20 | 4.75 | 4.95 | 2.50 | 6.3 | 6.3 | 71.0 | 2 |
| 485 | AB2 | 3.25 | 6.75 | 6.75 | 2.25 | 6.4 | 5.6 | 62.0 | 6 |
| | AB3 | 3.50 | 6.60 | 8.00 | 2.08 | 6.1 | 5.9 | 71.0 | 6 |
| | AB4 | 3.50 | 4.30 | 5.25 | 2.04 | 5.1 | 5.4 | 77.0 | 2 |
| 505 | AB2 | 3.25 | 7.46 | 6.75 | 2.96 | 5.9 | 5.1 | 65.0 | 6 |
| | AB3 | 3.40 | 8.75 | 7.90 | 4.25 | 5.9 | 5.6 | 77.0 | 6 |
| | AB4 | 3.70 | 6.46 | 5.45 | 4.20 | 5.1 | 5.1 | 85.0 | 2 |
| 525 | AB2 | 3.50 | 9.00 | 7.00 | 2.25 | 6.2 | 4.9 | 71.0 | 8 |
| | AB3 | 4.10 | 8.25 | 7.60 | 3.75 | 4.9 | 4.7 | 81.0 | 6 |
| | AB4 | 4.10 | 5.75 | 5.85 | 3.50 | 4.9 | 5.1 | 91.0 | 2 |

★ Drawings are representative of this series of drives and do not agree in exact detail for all drive sizes or assemblies. Dimensions are for reference only and are subject to change without notice unless certified.
♦ Size 385AB2 only, water outlet is on high speed end of drive.

### ALL DRIVE SIZES & REDUCTIONS ★
### ASSEMBLIES: 42, 44, 46, 48, 50, 52 & 54

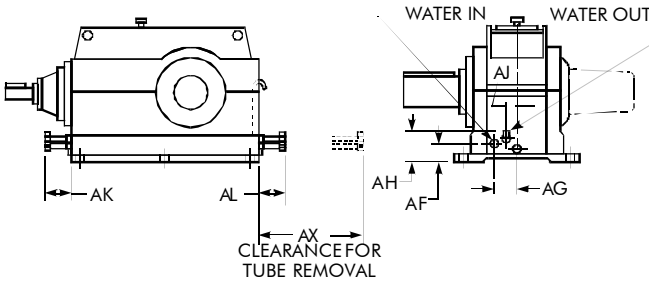


### ALL DRIVE SIZES & REDUCTIONS ★
### ASSEMBLIES: 41, 43, 45, 47, 49, 51, & 53

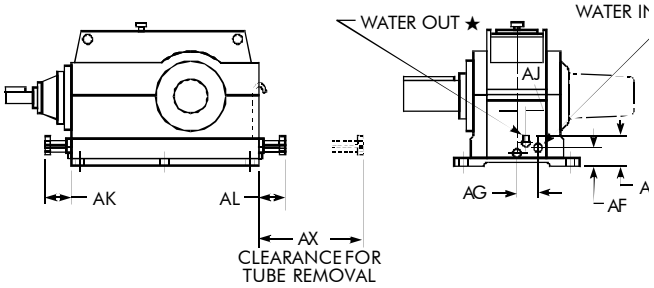


A minimum flow rate of 2 gallons per minute of clean water is required to prevent tube fouling. Flow rates in excess of 5 gallons per minute may prompt tube erosion. Thermal horsepower ratings are based on a water temperature of 70°F (21°C).

© Rexnord Industries,LLC, 1998, 2009.

# Type AR & ABR

## Cooling Tube Clearance/Dimensions — Inches

### WATER INLET AND OUTLET CONNECTIONS

(All Drive Sizes and Reductions)

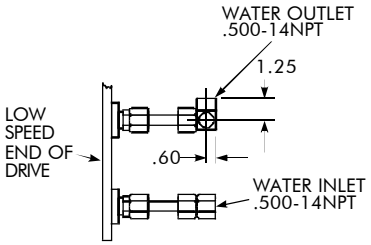


**Provide Clearance for Water Connections**

### Assemblies 2, 4 or 6

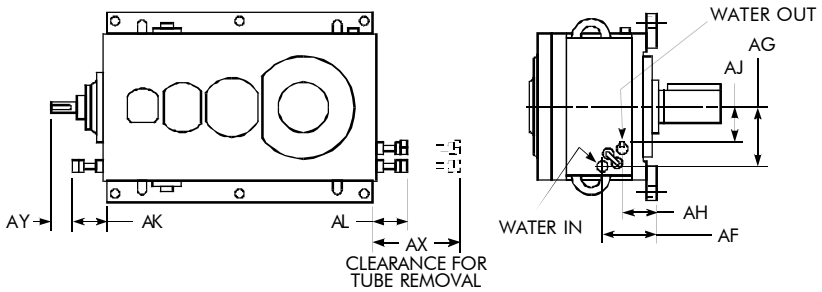


### Assemblies 1, 3 or 5

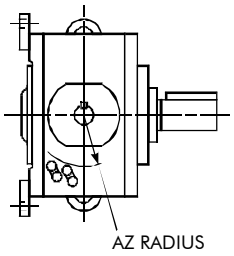


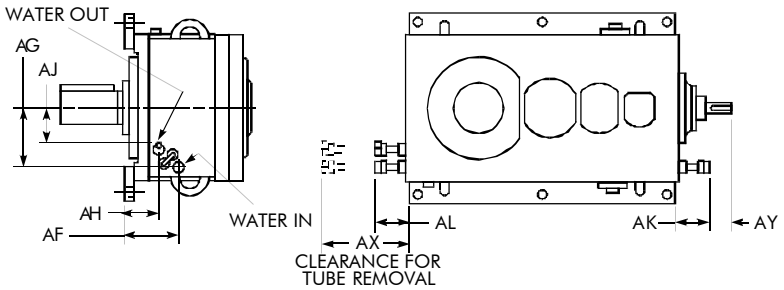


| DRIVE SIZE ★ | Reduction | AF | AG | AH | AJ | AK | AL | AX | AY | AZ | Std No. of Tubes |
|---|---|---|---|---|---|---|---|---|---|---|---|
| 405 | 2 & 3 | 7.48 | 8.08 | 5.25 | 6.27 | 5.7 | 6.6 | 50.3 | 2.1 | 7.75 | 2 |
| 425 | 2 & 3 | 8.69 | 10.20 | 5.24 | 6.96 | 7.1 | 7.2 | 57.3 | 3.4 | 7.75 | 4 |
| 445 | 2 & 3 | 8.86 | 11.75 | 5.81 | 7.94 | 5.7 | 8.0 | 63.1 | . . . | . . . | 4 |
| | 4 | 6.59 | 11.35 | 5.81 | 7.94 | 5.7 | 8.0 | 63.1 | . . . | . . . | 2 |
| 465 | 2 & 3 | 9.04 | 13.63 | 6.22 | 9.56 | 5.9 | 6.1 | 68.1 | . . . | . . . | 4 |
| | 4 | 6.82 | 13.03 | 6.22 | 9.56 | 5.9 | 6.1 | 68.1 | . . . | . . . | 2 |
| 485 | 2 | 11.53 | 14.95 | 6.50 | 10.29 | 6.0 | 5.9 | 68.0 | . . . | . . . | 6 |
| | 3 | 11.53 | 14.95 | 6.50 | 10.29 | 6.0 | 6.4 | 76.0 | . . . | . . . | 6 |
| | 4 | 9.31 | 14.36 | 8.72 | 10.89 | 6.0 | 6.4 | 76.0 | . . . | . . . | 2 |

★ Drawings are representative of this series of drives and do not agree in exact detail for all drive sizes or assemblies. Dimensions are for reference only and are subject to change without notice unless certified.

A minimum flow rate of 2 gallons per minute of clean water is required to prevent tube fouling. Flow rates in excess of 5 gallons per minute may prompt tube erosion. Thermal horsepower ratings are based on a water temperature of 70°F (21°C).


© Rexnord Industries, LLC, 1998, 2009.

# Type AXV & ABX

## Cooling Tube Clearance/Dimensions — Inches

### WATER INLET AND OUTLET CONNECTIONS

(All Drive Sizes and Reductions)

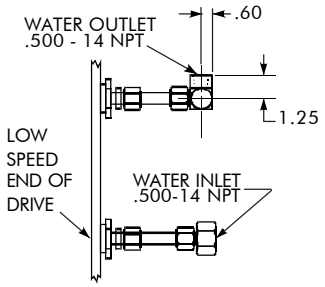


**Provide Clearance for Water Connections**

THIS TUBE ON 405 ABX ONLY
(WITH INLET & OUTLET ON L.S. END)

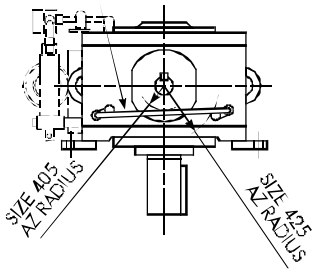


405 ABX - OPTIONAL LOCATION OF
WATER CONNECTIONS ON H.S. END

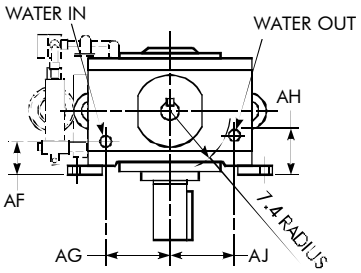


DRIVE SIZES 405 & 425 AXV2, AXV3 & ABX3

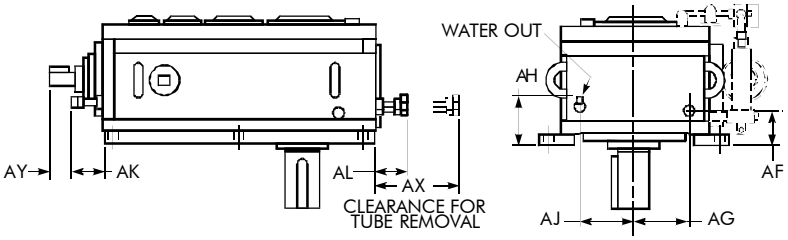


DRIVE SIZES 445 AXV2, AXV3 & ABX3

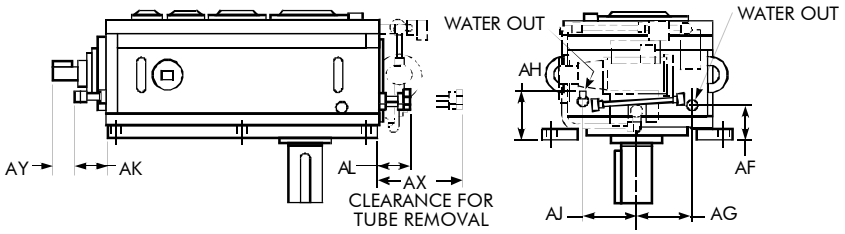


DRIVE SIZES 465 & 485 AXV2 AXV3 & ABX3

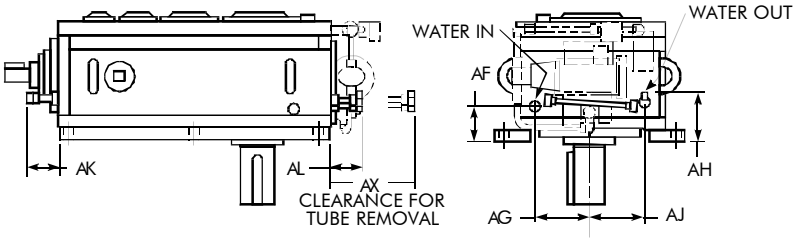


DRIVE SIZES 445, 465 & 485 AXV4 & ABX4

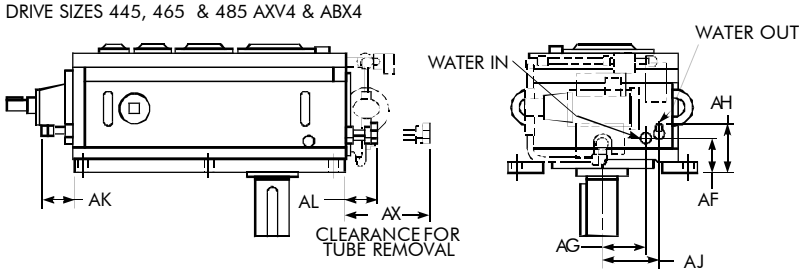


| DRIVE SIZE ★ | Red | AF | AG | AH | AJ | AK | AL | AX | AY | AZ | Std No. of Tubes |
|---|---|---|---|---|---|---|---|---|---|---|---|
| 405 † | 2 & 3 | 5.50 | 8.50 | 7.00 | 7.60 | 5.7 | 6.6 | 50.3 | 2.1 | 3.7 | 2 |
| 425 † | 2 & 3 | 5.33 | 10.20 | 7.73 | 10.20 | 7.1 | 7.2 | 57.3 | 3.4 | 8.5 | 4 |
| 445 | 2 & 3 | 6.31 | 11.50 | 8.88 | 11.19 | 5.7 | 8.0 | 63.1 | . . . | . . . | 4 |
| | 4 | 6.31 | 11.50 | 8.88 | 9.62 | 5.7 | 8.0 | 63.1 | . . . | . . . | 2 |
| 465 | 2 & 3 | 6.54 | 12.99 | 8.95 | 12.99 | 5.9 | 6.1 | 68.1 | . . . | . . . | 4 |
| | 4 | 6.54 | 11.00 | 8.95 | 12.99 | 5.9 | 6.1 | 68.1 | . . . | . . . | 2 |
| 485 | 2 | 7.00 | 13.50 | 9.76 | 15.94 | 6.0 | 5.9 | 68.0 | . . . | . . . | 6 |
| | 3 | 7.00 | 13.50 | 9.76 | 15.94 | 6.0 | 6.4 | 76.0 | . . . | . . . | 6 |
| | 4 | 6.75 | 14.46 | 9.76 | 12.99 | 6.0 | 6.4 | 76.0 | . . . | . . . | 2 |

★ Drawings shown are for Type ABX. Drawings are representative of this series of drives and do not agree in exact detail for all drive sizes or assemblies. Dimensions are for reference only and are subject to change without notice unless certified.

† Sizes 405 & 425 with cooling tubes will use alternate pump location.

A minimum flow rate of 2 gallons per minute of clean water is required to prevent tube fouling. Flow rates in excess of 5 gallons per minute may prompt tube erosion. Thermal horsepower ratings are based on a water temperature of 70°F (21°C).

© Rexnord Industries,LLC, 1998, 2009.

# Type A

## 600 Series Shaft Mount Cooler Dimensions — Inches

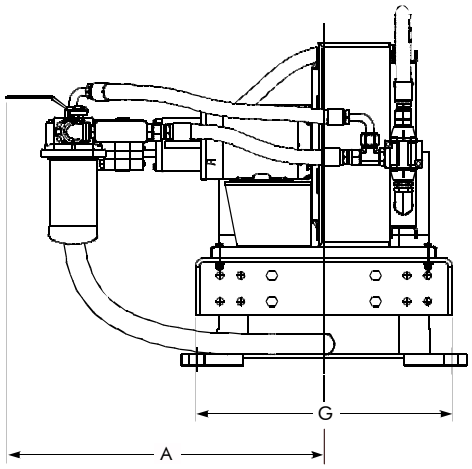


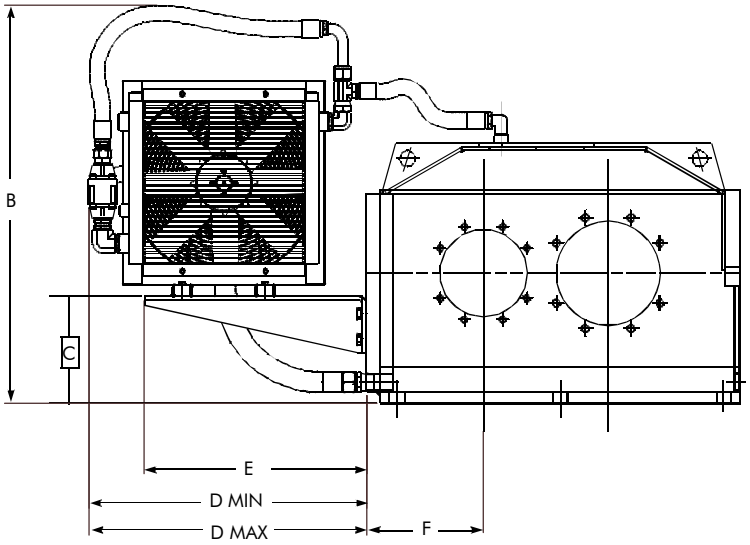


| DRIVE SIZE | PA MODEL | A | B | C | D MIN | D MAX | E | F | G |
|---|---|---|---|---|---|---|---|---|---|
| **385A1** | 605 | 29.38 | 31.91 | 8.3 | 24.75 | 29.61 | 21.38 | 9.48 | 24.75 |
| **405A1** | 605 | 29.38 | 32.49 | 8.88 | 24.75 | 29.61 | 21.38 | 10.94 | 24.75 |
| **425A1** | 610 | 30.51 | 38.2 | 10.25 | 22.75 | 27.75 | 21.38 | 11.26 | 24.75 |
| **445A1** | 610<br>620† | 30.51<br>30.28† | 39.2<br>38.79† | 11.25<br>11.25† | 22.75<br>26.9† | 26.75<br>31.88† | 21.38<br>26.38† | 12.9<br>12.9† | 24.75<br>27.25† |
| **465A1** | 620<br>630‡ | 30.28<br>27.67‡ | 40.29<br>44.93‡ | 12.75<br>12.75‡ | 26.9<br>32.78‡ | 31.88<br>37.76‡ | 26.38<br>30.38‡ | 14.5<br>14.5‡ | 27.25<br>28.75‡ |
| **485A1** | 620●<br>630♦ | 30.28●<br>27.67♦ | 42.29●<br>47.05♦ | 14.38●<br>14.75♦ | 26.9●<br>32.78♦ | 31.88●<br>37.76♦ | 26.38●<br>30.38♦ | 13.5●<br>13.5♦ | 27.25●<br>28.75♦ |
| **505A1** | 630<br>640✱ | 27.67<br>33.02✱ | 48.38<br>62.69✱ | 16.5<br>17✱ | 32.78<br>46.17✱ | 37.76<br>51.15✱ | 30.38<br>40.5✱ | 14.5<br>14.5✱ | 28.75<br>40✱ |
| **525A1** | 630▲<br>640♣ | 27.67▲<br>33.02♣ | 49.4▲<br>63.35♣ | 17.13▲<br>17.63♣ | 32.78▲<br>46.17♣ | 37.76▲<br>51.15♣ | 30.38▲<br>40.5♣ | 16.5▲<br>16.5♣ | 28.75▲<br>40♣ |

† Only used with RPM 1750 and higher, and 2.25 ratio and lower.
‡ Only used with RPM 1750 and higher, and 2.76 ratio and lower.
● Only used with RPM below 1200.
♦ Only used with RPM above 1200.
✱ Only used with RPM 1750 and higher, and 2.76 ratio and lower.
▲ Only used with RPM below 1200.
♣ Only used with RPM above 1200.


© Rexnord Industries, LLC, 1998, 2008.

# Type AXV & ABX

## Alternate Pump Location/Dimensions — Inches

| DRIVE SIZE ★ | H | HA | HB | HC | HD |
|---|---|---|---|---|---|
| **405** | 19.6 | 7.70 | 20.13 | 21.00 | 1.24 |
| **425** | 19.8 | 8.25 | 18.28 | 22.79 | 1.35 |
| **445** | 23.3 | 10.00 | 27.30 | 24.02 | 2.50 |
| **465** | 25.3 | 11.81 | 26.75 | 25.80 | 2.75 |
| **485** | 26.0 ✱ | 13.50 | 26.75 | 27.40 | 3.00 |

★ Dimensions are for reference only and are subject to change without notice unless certified.

✱ For 485AXV2 and 485ABX3, "H" = 27.2.

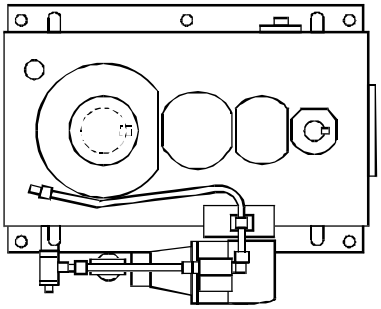

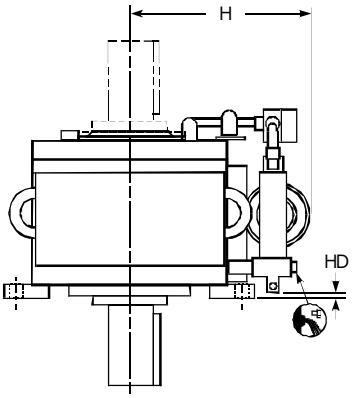


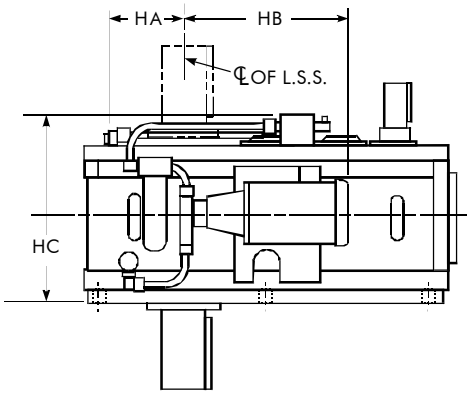


© Rexnord Industries, LLC, 1998, 2009.

# Type AR, ARJ, ABR & ABRJ

## Torque Arm/Dimensions — Inches

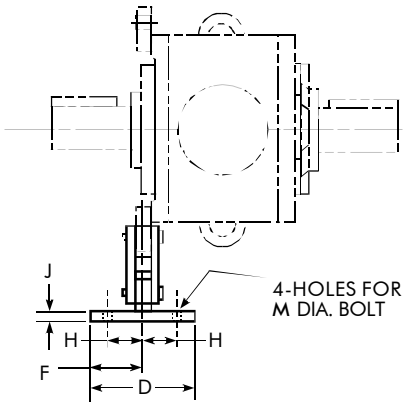


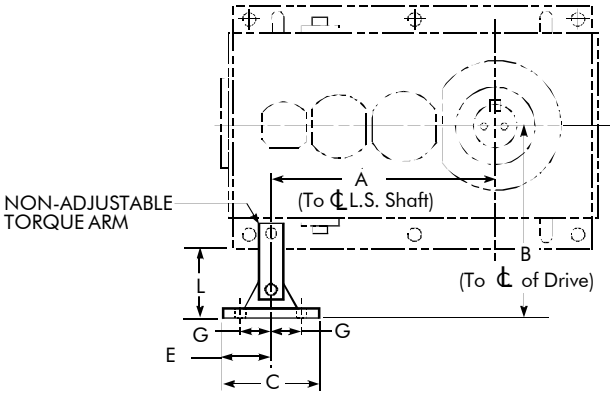


| DRIVE SIZE ★ | A | B ‡ Standard | B ‡ Maximum | C | D | E | F | G | H | J | L | M ♦ | DRIVE SIZE ★ |
|---|---|---|---|---|---|---|---|---|---|---|---|---|---|
| **405** | 25.50 | 22.00 | 45.50 | 11.00 | 12.00 | 5.50 | 6.00 | 3.50 | 4.00 | 1.25 | 8.13 | 1.25 | 405 |
| **425** | 29.00 | 24.00 | 47.50 | 11.00 | 12.00 | 5.50 | 6.00 | 3.50 | 4.00 | 1.25 | 8.10 | 1.25 | 425 |
| **445** | 33.00 | 27.50 | 62.00 | 12.00 | 13.50 | 6.00 | 6.75 | 4.00 | 4.75 | 1.50 | 9.00 | 1.50 | 445 |
| **465** | 37.50 | 29.50 | 66.50 | 12.00 | 13.50 | 6.00 | 6.75 | 4.00 | 4.75 | 1.50 | 9.00 | 1.50 | 465 |
| **485** | 42.00 † | 33.00 | 70.00 | 14.50 | 15.50 | 7.25 | 7.75 | 5.00 | 5.50 | 1.75 | 9.75 | 1.75 | 485 |

★ Drawings are representative of this series of drives and do not agree in exact detail for all drive sizes or assemblies. Dimensions are for reference only and are subject to change without notice unless certified. Torque arms for Sizes 505 thru 555 will be developed upon receipt of order.

† Dimension shown is for Size 485AR3, AR4 and ABR4; Size 485AR2 and ABR3 dimension A is 34.60".

‡ Dimension "B" lengths other than standard are available up to the maximum for an additional charge.

♦ Use Grade 5 fasteners for diameters through 1.50". For larger diameter fasteners, use ASTM A-354 Grade BC.


© Rexnord Industries, LLC, 1998, 2009.

# Type ARJ & ABRJ

## Hollow Low Speed Shaft — Shrink Disc Mounted

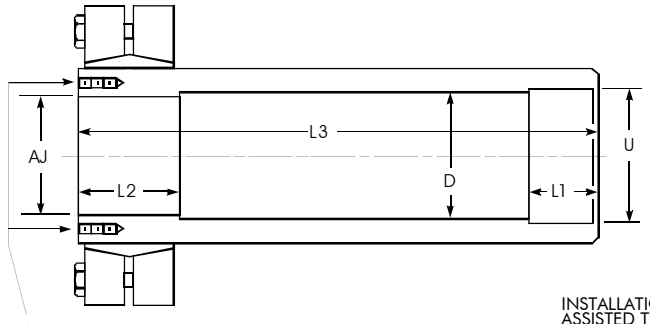


**Z** - QUANTITY
**ZA** - DIA. UNC TAPPED HOLES IN HOLLOW SHAFT
**ZB** - DEEP
**Y** - DIA. BOLT CIRCLE - EQUALLY SPACED HOLES FOR KEEPER PLATE RETENTION

INSTALLATION AND REMOVAL CAN BE ASSISTED THROUGH THE USE OF ADDITIONAL HARDWARE ITEMS SHOWN SHADED (CUSTOMER SUPPLIED)

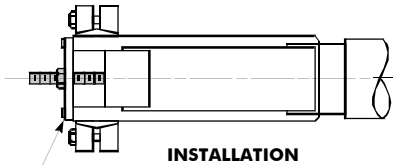

**INSTALLATION**
A THREADED ROD IS INSERTED THROUGH THE KEEPER PLATE CENTER HOLE AND INTO THE TAPPED HOLE IN THE END OF THE DRIVEN SHAFT. THE THREADED ROD, WITH NUT AS SHOWN, ARE USED TO AID ASSEMBLY.

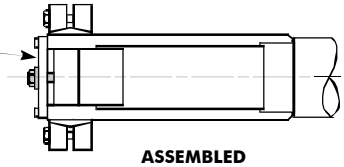

**ASSEMBLED**

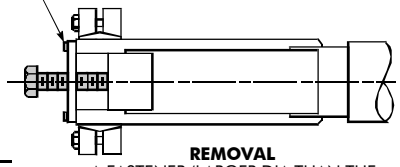

**REMOVAL**
A FASTENER (LARGER DIA THAN THE THREADED ROD) IS THREADED INTO THE TAPPED CENTER HOLE OF THE KEEPER PLATE AND IS USED TO SEPARATE THE DRIVEN SHAFT FROM THE HOLLOW LOW SPEED SHAFT OF THE GEAR DRIVE.

### Hollow Low Speed Shaft Dimensions — Inches

| DRIVE SIZE ★ | AJ † +.0016 −.0000 | D | L1 | L2 | L3 | U +.002 −.000 | Z | ZA | ZB | Y |
|---|---|---|---|---|---|---|---|---|---|---|
| **405** | 5.2505 | 5.400 | 2.50 | 3.50 | 24.70 | 5.500 | 8 | .375-16 | .75 | 6.00 |
| **425** | 6.0005 | 6.100 | 3.50 | 5.00 | 29.10 | 6.250 | 8 | .375-16 | .75 | 6.75 |
| **445** | 6.5005 | 6.600 | 3.50 | 6.00 | 31.80 | 6.750 | 6 | .500-13 | 1.00 | 7.50 |
| **465** | 7.2505 | 7.400 | 3.50 | 6.50 | 34.10 | 7.500 | 6 | .500-13 | 1.00 | 8.25 |
| **485** | 8.5005 | 8.625 | 5.00 | 8.00 | 37.30 | 8.750 | 6 | .500-13 | 1.00 | 9.75 |
| **505** | 9.7505 | 9.880 | 4.00 | 8.20 | 43.37 | 10.000 | 6 | .625-11 | 1.25 | 11.25 |
| **535** | 10.5005 | 10.600 | 4.00 | 9.37 | 43.24 | 10.750 | 8 | .625-11 | 1.25 | 12.00 |
| **555** | 11.4005 | 11.450 | 4.50 | 9.40 | 50.27 | 11.750 | 12 | .625-11 | 1.25 | 12.90 |

★ Dimensions are for reference only and are subject to change without notice unless certified.
† AJ tolerance for Size 485 is +.0020, −.0000.

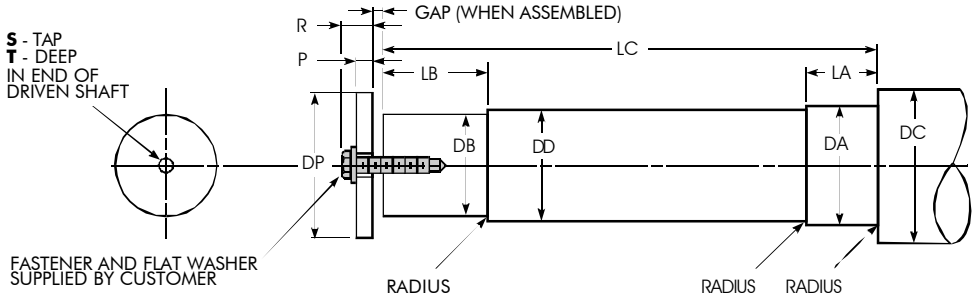


### Driven Shaft Recommended Dimensions — Inches

| DRIVE SIZE ★ | DA +.0000 −.0015 | DB +.000 −.001 | DC Min | DD +.010 −.010 | Radius Max | LA | LB | LC | DP | P | R | S | T | Fastener Length | Tapped Hole in Center of Keeper Plate | Gap |
|---|---|---|---|---|---|---|---|---|---|---|---|---|---|---|---|---|
| **405** | 5.500 | 5.250 | 6.00 | 5.312 | .125 | 2.38 | 3.75 | 24.58 | 6.88 | .75 | 1.76 | 1.250-7 | 2.50 | 2.50 | 1.750-5 | 0.12 |
| **425** | 6.250 | 6.000 | 6.75 | 6.062 | .125 | 3.38 | 5.25 | 28.98 | 7.62 | .75 | 1.76 | 1.250-7 | 2.50 | 2.50 | 1.750-5 | 0.12 |
| **445** | 6.750 | 6.500 | 7.25 | 6.531 | .125 | 3.38 | 6.25 | 31.68 | 8.62 | 1.00 | 2.18 | 1.500-6 | 3.00 | 3.00 | 2.000-4.5 | 0.12 |
| **465** | 7.500 | 7.250 | 8.25 | 7.312 | .125 | 3.38 | 6.75 | 33.98 | 9.38 | 1.00 | 2.18 | 1.500-6 | 3.00 | 3.00 | 2.000-4.5 | 0.12 |
| **485** | 8.750 | 8.500 | 9.50 | 8.562 | .125 | 4.88 | 8.25 | 37.18 | 10.88 | 1.00 | 2.18 | 1.500-6 | 3.00 | 3.00 | 2.000-4.5 | 0.12 |
| **505** | 10.000 | 9.750 | 10.75 | 9.800 | .125 | 3.88 | 8.40 | 43.20 | 12.75 | 1.25 | 2.42 | 1.500-6 | 3.00 | 3.25 | 2.000-4.5 | 0.17 |
| **535** | 10.750 | 10.500 | 11.50 | 10.520 | .125 | 3.88 | 9.60 | 43.00 | 13.50 | 1.25 | 2.75 | 2.000-4.5 | 4.00 | 4.00 | 2.500-4 | 0.24 |
| **555** | 11.750 | 11.400 | 12.50 | 11.370 | .125 | 4.38 | 9.60 | 50.00 | 14.30 | 1.50 | 3.00 | 2.000-4.5 | 4.00 | 4.00 | 2.500-4 | 0.27 |

★ Dimensions are for reference only and are subject to change without notice unless certified.

© Rexnord Industries,LLC, 1998, 2009.

# Type AXVQ & ABXQ

## Hollow Low Speed Shaft With Keeper Plate

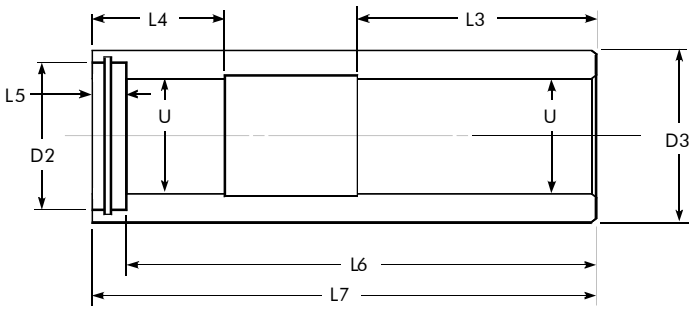


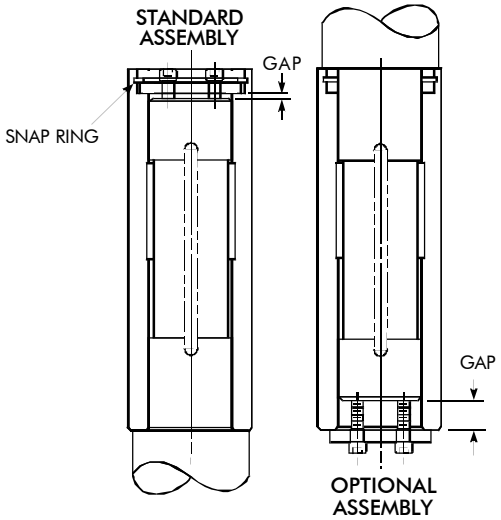


### Hollow Low Speed Shaft Dimensions — Inches

| DRIVE SIZE ★ | Shaft-Diameters ‡ U +.002 −.000 | D2 +.010 −.000 | D3 | L3 | L4 | L5 | L6 | L7 | Gap Between Shaft & Plate Std Assy | Opt Assy |
|---|---|---|---|---|---|---|---|---|---|---|
| **405** | 5.375 | 6.000 | 7.00 | 13.06 | 5.87 | 1.875 | 23.435 | 25.310 | .14 | 2.01 |
| **425** | 6.000 | 6.750 | 7.75 | 13.20 | 6.50 | 2.100 | 24.800 | 26.900 | .10 | 2.20 |
| **445** | 6.750 | 7.750 | 9.00 | 15.00 | 6.90 | 2.200 | 27.200 | 29.400 | .10 | 2.30 |
| **465** | 7.500 | 8.750 | 10.00 | 15.65 | 7.25 | 2.500 | 28.800 | 31.300 | .10 | 2.60 |
| **485** | 8.500 | 9.750 | 11.50 | 17.30 | 7.10 | 2.750 | 31.250 | 34.000 | .15 | 2.90 |
| **505** | 9.001 | 10.500 | 12.25 | 19.70 | 8.10 | 3.250 | 35.550 | 38.800 | .15 | 3.40 |
| **535** | 10.501 | 11.750 | 13.50 | 21.00 | 8.45 | 3.250 | 37.700 | 40.950 | .20 | 3.45 |
| **555** | 11.501 | 13.000 | 15.00 | 23.40 | 9.41 | 3.310 | 42.690 | 46.000 | .19 | 3.50 |

★ Dimensions are for reference only and are subject to change without notice unless certified.
‡ Before drive assembly.

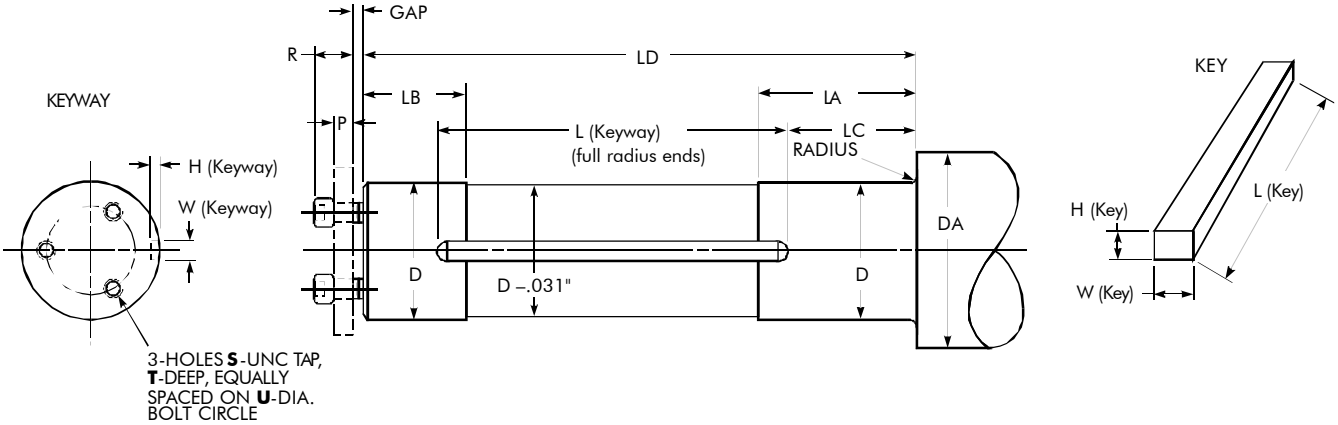


### Driven Shaft Recommended Dimensions — Inches

| DRIVE SIZE ★ | Shaft D +.000 −.002 | DA Min | Radius ± .010 | LD | LA | LB | LC | P +.000 −.005 | R ■ | Keeper Plate Snap Ring ● (Low Speed Shaft Down Only) | S | U | T | Fastener Length Shaft Down | Shaft Up | Keyway W † | H | L ♦ | Key W | H +.010 −.000 | L |
|---|---|---|---|---|---|---|---|---|---|---|---|---|---|---|---|---|---|---|---|---|---|
| **405** | 5.373 | 6.500 | .125 | 23.300 | 5.61 | 3.64 | 4.64 | .870 | 1.62 | 600 | .750-10 | 3.500 | 1.560 | 2.25 | 4.00 | 1.000 | .453 | 16.000 | 1.000 | .750 | 15.000 |
| **425** | 5.998 | 7.250 | .125 | 24.700 | 6.24 | 4.04 | 4.70 | 1.000 | 2.13 | 675 | 1.125-7 | 3.500 | 2.250 | 2.75 | 4.75 | 1.500 | .750 | 17.500 | 1.500 | 1.000 | 16.000 |
| **445** | 6.748 | 8.250 | .125 | 27.100 | 6.64 | 4.34 | 5.45 | 1.000 | 2.25 | 775 | 1.250-7 | 4.000 | 2.500 | 3.00 | 5.00 | 1.500 | .500 | 18.500 | 1.500 | 1.000 | 17.000 |
| **465** | 7.498 | 9.250 | .125 | 28.700 | 6.99 | 4.39 | 5.90 | 1.250 | 2.50 | 875 | 1.250-7 | 4.750 | 2.500 | 3.25 | 5.50 | 1.500 | .500 | 19.500 | 1.500 | 1.000 | 18.000 |
| **485** | 8.498 | 10.250 | .125 | 31.100 | 6.84 | 3.99 | 5.73 | 1.490 | 2.99 | 975 | 1.500-6 | 5.000 | 3.000 | 4.00 | 6.50 | 1.500 | .500 | 22.500 | 1.500 | 1.000 | 21.000 |
| **505** | 8.999 | 11.100 | .125 | 35.400 | 8.00 | 4.80 | 3.00 | 1.750 | 3.12 | 1050 | 1.500-6 | 6.000 | 3.000 | 4.50 | 7.50 | 2.000 | 1.000 | 30.000 | 2.000 | 1.500 | 28.000 |
| **535** | 10.499 | 12.350 | .125 | 37.500 | 8.20 | 5.00 | 6.00 | 1.750 | 3.12 | 1175 | 1.500-6 | 7.500 | 3.000 | 4.50 | 7.50 | 2.500 | 1.000 | 26.500 | 2.500 | 1.750 | 24.000 |
| **555** | 11.499 | 13.600 | .125 | 42.500 | 9.30 | 6.00 | 4.00 | 1.750 | 3.28 | 1300 | 1.750-5 | 8.000 | 3.500 | 5.00 | 8.00 | 3.000 | 1.250 | 35.000 | 3.000 | 2.000 | 32.000 |

★ Dimensions are for reference only and are subject to change without notice unless certified.
● For Sizes 405-485, TRUARC N5000 Series snap ring; For Sizes 505-555, Spirolox RRN or equivalent.
■ For Sizes 505-555, hex head fastener with helical spring lock washer.
† Sizes 405-425, +.0035", –.0000", Sizes 445-485, +.0040", –.0000".
♦ Full radius keyway ends.


© Rexnord Industries, LLC, 1998, 2009.

# Type MCF Couplings
## Flange Connection/Dimensions — Inches

***WARNING:*** *Drive system analysis must be performed by Rexnord Application Engineering. Driven shaft loads will be furnished to check shaft stresses and bearing loads. Improper installation and maintenance of this coupling may result in injury.*

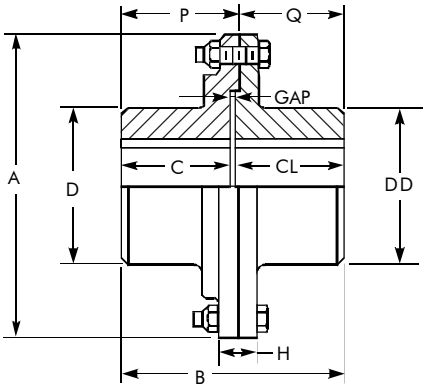


DRIVING HUB (Type 2)

DRIVEN HUB (Type 2)

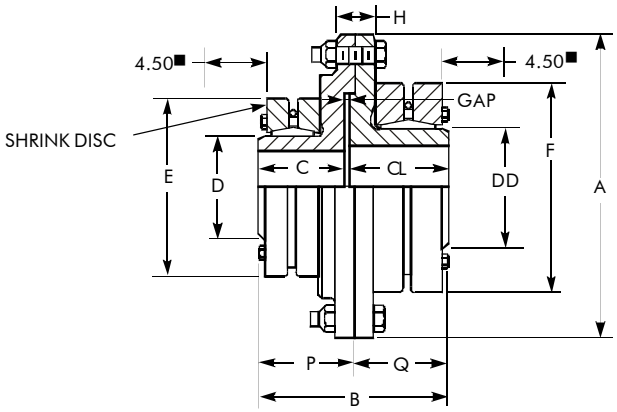


DRIVING HUB WITH SHRINK DISC (Type 4)

DRIVEN HUB WITH SHRINK DISC (Type 4)

| DRIVE SIZE | CPLG SIZE ★ | Hub Type: Driving Hub | Hub Type: No. † | Hub Type: Driven Hub | Hub Type: No. † | Min/Max Bore ‡: Driving Hub | Min/Max Bore ‡: Driven Hub | Cplg ● Wt-lb | A | B | C | CL | D | DD | E | F | H | P | Q | Gap |
|---|---|---|---|---|---|---|---|---|---|---|---|---|---|---|---|---|---|---|---|---|
| 405 | 1045MCF | | 2 | | 2 | 3.000-7.000 | 3.000-7.000 | 510 | 19.68 | 14.12 | 7.00 | 7.00 | 10.00 | 10.00 | . . . | . . . | 2.50 | 7.62 | 6.50 | .12 |
| | | | 2 | 175SD | 4 | 3.000-7.000 | 4.921-5.315 | 500 | 19.68 | 12.74 | 7.00 | 5.62 | 10.00 | 6.89 | . . . | 11.82 | 2.50 | 7.62 | 5.12 | .12 |
| | | | 2 | 185SD | 4 | 3.000-7.000 | 5.315-5.709 | 560 | 19.68 | 13.68 | 7.00 | 6.56 | 10.00 | 7.28 | . . . | 12.99 | 2.50 | 7.62 | 6.06 | .12 |
| | | | 2 | 200SD | 4 | 3.000-7.000 | 5.709-6.102 | 570 | 19.68 | 13.68 | 7.00 | 6.56 | 10.00 | 7.87 | . . . | 13.78 | 2.50 | 7.62 | 6.06 | .12 |
| | | 175SD | 4 | | 2 | 4.921-5.315 | 3.000-7.000 | 500 | 19.68 | 12.75 | 5.63 | 7.00 | 6.89 | 10.00 | 11.82 | . . . | 2.50 | 6.25 | 6.50 | .12 |
| | | 175SD | 4 | 175SD | 4 | 4.921-5.315 | 4.921-5.315 | 490 | 19.68 | 11.37 | 5.63 | 5.62 | 6.89 | 6.89 | 11.82 | 11.82 | 2.50 | 6.25 | 5.12 | .12 |
| | | 175SD | 4 | 185SD | 4 | 4.921-5.315 | 5.315-5.709 | 540 | 19.68 | 12.31 | 5.63 | 6.56 | 6.89 | 7.28 | 11.82 | 12.99 | 2.50 | 6.25 | 6.06 | .12 |
| | | 175SD | 4 | 200SD | 4 | 4.921-5.315 | 5.709-6.102 | 560 | 19.68 | 12.31 | 5.63 | 6.56 | 6.89 | 7.87 | 11.82 | 13.78 | 2.50 | 6.25 | 6.06 | .12 |
| 425 | 1055MCF | | 2 | | 2 | 3.500-8.000 | 3.500-8.000 | 720 | 21.84 | 16.12 | 8.00 | 8.00 | 11.50 | 11.50 | . . . | . . . | 2.50 | 8.62 | 7.50 | .12 |
| | | | 2 | 200SD | 4 | 3.500-8.000 | 5.709-6.102 | 710 | 21.84 | 14.68 | 8.00 | 6.56 | 11.50 | 7.87 | . . . | 13.78 | 2.50 | 8.62 | 6.06 | .12 |
| | | | 2 | 220SD | 4 | 3.500-8.000 | 6.299-6.693 | 770 | 21.84 | 15.56 | 8.00 | 7.44 | 11.50 | 8.66 | . . . | 14.57 | 2.50 | 8.62 | 6.94 | .12 |
| | | | 2 | 240SD | 4 | 3.500-8.000 | 6.693-7.480 | 840 | 21.84 | 16.12 | 8.00 | 8.00 | 11.50 | 9.45 | . . . | 15.94 | 2.50 | 8.62 | 7.50 | .12 |
| | | 200SD | 4 | | 2 | 5.709-6.102 | 3.500-8.000 | 710 | 21.84 | 14.69 | 6.57 | 8.00 | 7.87 | 11.50 | 13.78 | . . . | 2.50 | 7.19 | 7.50 | .12 |
| | | 200SD | 4 | 200SD | 4 | 5.709-6.102 | 5.709-6.102 | 700 | 21.84 | 13.25 | 6.57 | 6.56 | 7.87 | 7.87 | 13.78 | 13.78 | 2.50 | 7.19 | 6.06 | .12 |
| | | 200SD | 4 | 220SD | 4 | 5.709-6.102 | 6.299-6.693 | 760 | 21.84 | 14.13 | 6.57 | 7.44 | 7.87 | 8.66 | 13.78 | 14.57 | 2.50 | 7.19 | 6.94 | .12 |
| | | 200SD | 4 | 240SD | 4 | 5.709-6.102 | 6.693-7.480 | 840 | 21.84 | 14.69 | 6.57 | 8.00 | 7.87 | 9.45 | 13.78 | 15.94 | 2.50 | 7.19 | 7.50 | .12 |
| 445 | 1060MCF | | 2 | | 2 | 4.000-9.000 | 4.000-9.000 | 990 | 23.25 | 18.12 | 9.00 | 9.00 | 13.00 | 13.00 | . . . | . . . | 3.00 | 9.62 | 8.50 | .12 |
| | | | 2 | 220SD | 4 | 4.000-9.000 | 6.299-6.693 | 960 | 23.25 | 16.81 | 9.00 | 7.69 | 13.00 | 8.66 | . . . | 14.57 | 3.00 | 9.62 | 7.19 | .12 |
| | | | 2 | 240SD | 4 | 4.000-9.000 | 6.693-7.480 | 1040 | 23.25 | 17.31 | 9.00 | 8.19 | 13.00 | 9.45 | . . . | 15.94 | 3.00 | 9.62 | 7.69 | .12 |
| | | | 2 | 260SD | 4 | 4.000-9.000 | 7.480-8.268 | 1110 | 23.25 | 18.12 | 9.00 | 9.00 | 13.00 | 10.24 | . . . | 16.93 | 3.00 | 9.62 | 8.50 | .12 |
| | | 220SD | 4 | | 2 | 6.299-6.693 | 4.000-9.000 | 960 | 23.25 | 16.81 | 7.69 | 9.00 | 13.00 | 13.00 | 14.57 | . . . | 3.00 | 8.31 | 8.50 | .12 |
| | | 220SD | 4 | 220SD | 4 | 6.299-6.693 | 6.299-6.693 | 940 | 23.25 | 15.50 | 7.69 | 7.69 | 8.66 | 8.66 | 14.57 | 14.57 | 3.00 | 8.31 | 7.19 | .12 |
| | | 220SD | 4 | 240SD | 4 | 6.299-6.693 | 6.693-7.480 | 1010 | 23.25 | 16.00 | 7.69 | 8.19 | 9.45 | 9.45 | 14.57 | 15.94 | 3.00 | 8.31 | 7.69 | .12 |
| | | 220SD | 4 | 260SD | 4 | 6.299-6.693 | 7.480-8.268 | 1080 | 23.25 | 16.81 | 7.69 | 9.00 | 10.24 | 10.24 | 14.57 | 16.93 | 3.00 | 8.31 | 8.50 | .12 |

★ Refer to the Factory all applications above 100 rpm and for drive Sizes 505-585. Dimensions are for reference only and are subject to change without notice unless certified.

■ Distance required for torque wrench clearance to tighten the shrink disc fasteners. Consult Factory for alternatives if axial space is not available.

‡ All interference fit hubs are bored for a **Minimum** interference fit of .00075 inches per inch of shaft diameter. Driven shaft diameter tolerance is +.000", –.001".

● Coupling weights are for hubs with no bore and include shrink disc(s).

† Number 2 hub is straight bored without shrink disc; Number 4 hub is straight bored with shrink disc.

© Rexnord Industries,LLC, 1998, 2009.

# Type MCF Couplings
## Flange Connection/Dimensions — Inches

***WARNING:*** *Drive system analysis must be performed by Rexnord Application Engineering. Driven shaft loads will be furnished to check shaft stresses and bearing loads. Improper installation and maintenance of this coupling may result in injury.*

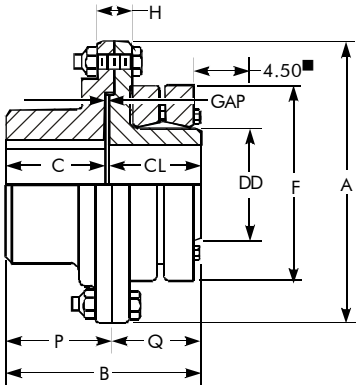


DRIVING HUB (Type 2)

DRIVEN HUB WITH SHRINK DISC (Type 4)

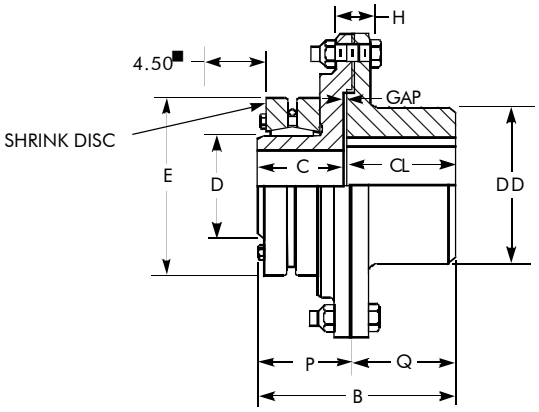


DRIVING HUB (Type 4)

DRIVEN HUB (Type 2)

| DRIVE SIZE | CPLG SIZE ★ | Hub Type: Driving Hub | Hub Type: No. † | Hub Type: Driven Hub | Hub Type: No. † | Min/Max Bore ‡: Driving Hub | Min/Max Bore ‡: Driven Hub | Cplg ● Wt-lb | A | B | C | CL | D | DD | E | F | H | P | Q | Gap |
|---|---|---|---|---|---|---|---|---|---|---|---|---|---|---|---|---|---|---|---|---|
| 465 | 1065MCF | RSB | 2 | RSB | 2 | 5.000-10.000 | 5.000-10.000 | 1260 | 24.50 | 20.12 | 10.00 | 10.00 | 14.00 | 14.00 | . . . | . . . | 3.50 | 10.62 | 9.50 | .12 |
| | | RSB | 2 | 240SD | 4 | 5.000-10.000 | 6.693-7.480 | 1230 | 24.50 | 18.56 | 10.00 | 8.44 | 14.00 | 9.45 | . . . | 15.94 | 3.50 | 10.62 | 7.94 | .12 |
| | | RSB | 2 | 260SD | 4 | 5.000-10.000 | 7.480-8.268 | 1300 | 24.50 | 19.18 | 10.00 | 9.06 | 14.00 | 10.24 | . . . | 16.93 | 3.50 | 10.62 | 8.56 | .12 |
| | | RSB | 2 | 280SD | 4 | 5.000-10.000 | 8.268-9.055 | 1410 | 24.50 | 19.65 | 10.00 | 9.53 | 14.00 | 11.02 | . . . | 18.11 | 3.50 | 10.62 | 9.03 | .12 |
| | | RSB | 2 | 300SD | 4 | 5.000-10.000 | 9.055-9.646 | 1460 | 24.50 | 19.81 | 10.00 | 9.69 | 14.00 | 11.81 | . . . | 19.09 | 3.50 | 10.62 | 9.19 | .12 |
| | | 240SD | 4 | RSB | 2 | 6.693-7.480 | 5.000-10.000 | 1230 | 24.50 | 19.06 | 8.44 | 10.00 | 9.45 | 14.00 | 15.94 | . . . | 3.50 | 9.06 | 9.50 | .12 |
| | | 240SD | 4 | 240SD | 4 | 6.693-7.480 | 6.693-7.480 | 1210 | 24.50 | 17.00 | 8.44 | 8.44 | 9.45 | 9.45 | 15.94 | 15.94 | 3.50 | 9.06 | 7.94 | .12 |
| | | 240SD | 4 | 260SD | 4 | 6.693-7.480 | 7.480-8.268 | 1270 | 24.50 | 17.62 | 8.44 | 9.06 | 9.45 | 10.24 | 15.94 | 16.93 | 3.50 | 9.06 | 8.56 | .12 |
| | | 240SD | 4 | 280SD | 4 | 6.693-7.480 | 8.268-9.055 | 1380 | 24.50 | 18.09 | 8.44 | 9.53 | 9.45 | 11.02 | 15.94 | 18.11 | 3.50 | 9.06 | 9.03 | .12 |
| | | 240SD | 4 | 300SD | 4 | 6.693-7.480 | 9.055-9.646 | 1430 | 24.50 | 18.25 | 8.44 | 9.69 | 9.45 | 11.81 | 15.94 | 19.09 | 3.50 | 9.06 | 9.19 | .12 |
| 485 | 1075MCF | RSB | 2 | RSB | 2 | 6.000-11.500 | 6.000-11.500 | 1870 | 27.50 | 23.12 | 11.50 | 11.50 | 16.00 | 16.00 | . . . | . . . | 4.00 | 12.12 | 11.00 | .12 |
| | | RSB | 2 | 280SD | 4 | 6.000-11.500 | 8.268-9.055 | 1840 | 27.50 | 21.40 | 11.50 | 9.78 | 16.00 | 11.02 | . . . | 18.11 | 4.00 | 12.12 | 9.28 | .12 |
| | | RSB | 2 | 300SD | 4 | 6.000-11.500 | 9.055-9.646 | 1890 | 27.50 | 21.56 | 11.50 | 9.94 | 16.00 | 11.81 | . . . | 19.09 | 4.00 | 12.12 | 9.44 | .12 |
| | | RSB | 2 | 320SD | 4 | 6.000-11.500 | 9.449-10.236 | 1990 | 27.50 | 21.87 | 11.50 | 10.25 | 16.00 | 12.60 | . . . | 20.47 | 4.00 | 12.12 | 9.75 | .12 |
| | | 208SD ✱ | 4 | RSB | 2 | 8.268-9.055 | 6.000-11.500 | 1840 | 27.50 | 21.44 | 9.82 | 11.50 | 11.02 | 16.00 | 18.11 | . . . | 4.00 | 10.44 | 11.00 | .12 |
| | | 208SD ✱ | 4 | 280SD | 4 | 8.268-9.055 | 8.268-9.055 | 1810 | 27.50 | 19.72 | 9.82 | 9.78 | 11.02 | 11.02 | 18.11 | 18.11 | 4.00 | 10.44 | 9.28 | .12 |
| | | 208SD ✱ | 4 | 300SD | 4 | 8.268-9.055 | 9.055-9.646 | 1880 | 27.50 | 19.88 | 9.82 | 9.94 | 11.02 | 11.81 | 18.11 | 19.09 | 4.00 | 10.44 | 9.44 | .12 |
| | | 208SD ✱ | 4 | 320SD | 4 | 8.268-9.055 | 9.449-10.236 | 1960 | 27.50 | 20.19 | 9.82 | 10.25 | 11.02 | 12.60 | 18.11 | 20.47 | 4.00 | 10.44 | 9.75 | .12 |

★ Refer to the Factory all applications above 100 rpm and for drive Sizes 505-585. Dimensions are for reference only and are subject to change without notice unless certified.
■ Distance required for torque wrench clearance to tighten the shrink disc fasteners. Consult Factory for alternatives if axial space is not available.
‡ All interference fit hubs are bored for a **Minimum** interference fit of .00075 inches per inch of shaft diameter. Driven shaft diameter tolerance is +.000", –.001".
● Coupling weights are for hubs with no bore and include shrink disc(s).
† Number 2 hub is straight bored without shrink disc; Number 4 hub is straight bored with shrink disc.
✱ Not available on types AR or ABR.


© Rexnord Industries, LLC, 1998, 2009.

## Conversion Factors/U.S. Units to SI Metric Units

(Conversion values listed are for reference only. DO NOT use these values to convert or compare inch and metric selection guides.)

| DESCRIPTION | U.S. Units | Multiply by to Obtain | SI Metric Units |
|---|---|---|---|
| Force | pound force (lbf) | 4.448 | newton (N) |
| Length | inch (in) | 25.4 | millimeter (mm) |
| | foot (ft) | 0.3048 | meter (m) |
| Mass | pound mass (lbm) | 0.4536 | kilogram (kg) |
| Power | horsepower (hp) | 0.7457 | kilowatt (kW) |
| Rotational Inertia | pound-inch$^2$ (lb-in$^2$) | 0.0002926 | kilogram-meter$^2$ (kg-m$^2$) |
| Rotational Speed | revolutions per minute (rpm) | 1 | 1/min |
| Temperature | °F | °C = (°F-32)/1.8 | °C |
| Torque | pound-inch (lb-in) | 0.113 | newton-meter (Nm) |
| | pound-foot (lb-ft) | 1.356 | newton-meter (Nm) |
| Velocity | feet per minute (ft/min) | 0.00508 | meters per second (m/s) |
| | miles per hour (mph) | 1.609 | kilometers per hour (km/h) |
| Volume | gallon (gal) | 3.785 | liter (L) |
| Volumetric Flow | gallons per minute (gal/min) | 0.06308 | liters per second (L/s) |

## Conversion Factors/SI Metric Units to U.S. Units

(Conversion values listed are for reference only. DO NOT use these values to convert or compare inch and metric selection guides.)

| DESCRIPTION | SI Metric Units | Multiply by to Obtain | U.S. Units |
|---|---|---|---|
| Force | newton (N) | 0.2248 | pound force (lbf) |
| Length | millimeter (mm) | 0.03937 | inch (in) |
| | meter (m) | 3.2808 | foot (ft) |
| Mass | kilogram (kg) | 2.2046 | pound mass (lbm) |
| Power | kilowatt (kW) | 1.341 | horsepower (hp) |
| Rotational Inertia | kilogram-meter$^2$ (kg-m$^2$) | 3417.6 | pound-inch$^2$ (lb-in$^2$) |
| Rotational Speed | 1/min | 1 | revolutions per minute (rpm) |
| Temperature | °C | °F = 1.8(°C) + 32 | °F |
| Torque | newton-meter (Nm) | 8.850 | pound-inch (lb-in) |
| | newton-meter (Nm) | 0.7376 | pound-foot (lb-ft) |
| Velocity | meters per second(m/s) | 196.85 | feet per minute (ft/min) |
| | kilometers per hour (km/h) | 0.6124 | miles per hour (mph) |
| Volume | liter (L) | 0.2642 | gallon (gal) |
| Volumetric Flow | liters per second (L/s) | 15.85 | gallons per minute (gal/min) |

# Equation:

$$\text{Torque (Nm)} = \frac{9550 \times P}{n} \qquad \text{Torque (lb - in)} = \frac{63{,}000 \times hp}{n}$$

Where: P = Power (kW); n = shaft speed (rpm)

© Rexnord Industries,LLC, 1998, 2009.

**THIS PAGE INTENTIONALLY LEFT BLANK**


© Rexnord Industries, LLC, 1998, 2009.

866-REXNORD/866-739-6673 (Within the US)
414-643-2366 (Outside the US)
www.rexnord.com

## Why Choose Rexnord?

When it comes to providing highly engineered products that improve productivity and efficiency for industrial applications worldwide, Rexnord is the most reliable in the industry. Commitment to customer satisfaction and superior value extend across every business function.

### Delivering Lowest Total Cost of Ownership

The highest quality products are designed to help prevent equipment downtime and increase productivity and dependable operation.

### Valuable Expertise

An extensive product offering is accompanied by global sales specialists, customer service and maintenance support teams, available anytime.

### Solutions to Enhance Ease of Doing Business

Commitment to operational excellence ensures the right products at the right place at the right time.

**Rexnord Corporation**
Rexnord is a growth-oriented, multi-platform industrial company with leading market shares and highly trusted brands that serve a diverse array of global end markets.

**Process and Motion Control**
The Rexnord Process and Motion Control platform designs, manufactures, markets and services specified, highly engineered mechanical components used within complex systems where our customers' reliability requirements and the cost of failure or downtime are extremely high.

**Water Management**
The Rexnord Water Management platform designs, procures, manufactures and markets products that provide and enhance water quality, safety, flow control and conservation.

©2013 Rexnord

131-110 Printed in USA 06/09